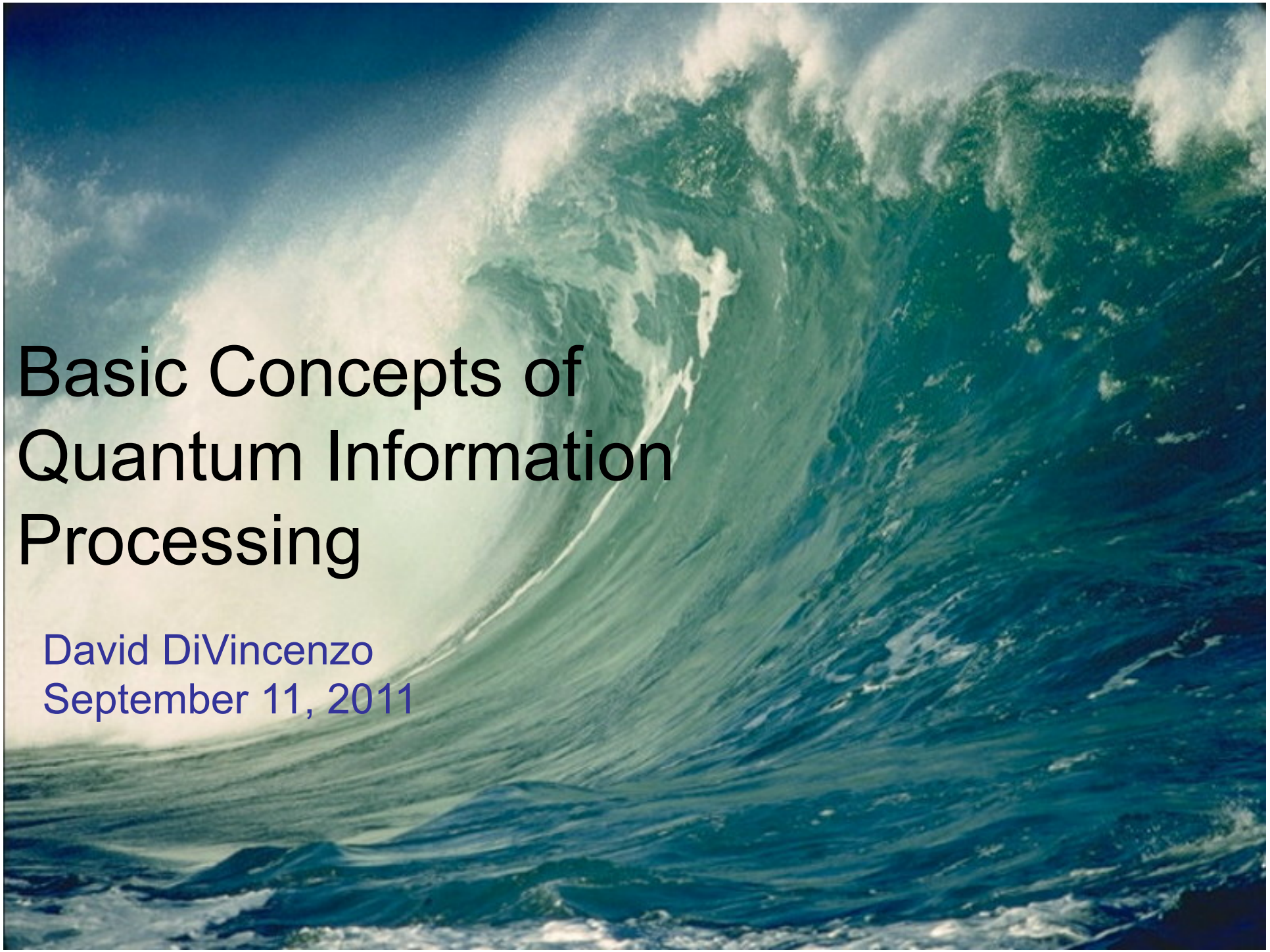

Basic Concepts of Quantum Information Processing

David DiVincenzo

September 11, 2011

Description: L-R: A.J. Rutgers; Hendrik Casimir in an automobile they bought for $50.00 to drive from Ann Arbor, Michigan (1930 theoretical physics summer school) to New York City where they abandoned it. (photo: S. Goudsmit; see *Haphazard Reality*, p. 80.)

Outline

- What is a qubit?
- Basic quantum gates and algorithms
- Physical systems for quantum computation
- Criteria for implementation of q.c.
- Actual quantum measurements
- Actual quantum gates
- Quantum error correction

What is a qubit?

Web Images Videos Maps News Shopping Mail more dpdvdpdv@gmail.com

Google

qubit

About 95,800 results (0.20 seconds)

Advanced search

Everything
Images
Videos
News
Shopping
More

Any time
Past hour
Past 24 hours
Past week
Past month
Past year
Custom range...

All results
Sites with images

Dictionary

Web definitions

In quantum computing, a qubit or quantum bit is a unit of quantum information —the quantum analogue of the classical bit —with additional dimensions associated to the quantum properties of a physical atom. ...
en.wikipedia.org/wiki/Qubit

Qubit is a Canadian game show that premiered July 4, 2009, on the Discovery Channel. Hosted by Andrew Anthony, the half-hour series is filmed in Toronto, Ontario. The show is produced by Exploration Production and CTVglobemedia.
en.wikipedia.org/wiki/Qubit_(game_show)

The analog of a bit register in a quantum computer. Unlike in a classical computer, a qubit can be in a superposition of 0 and 1 simultaneously, enabling massive parallelism in a quantum computer. ...
www.bbn.com/utility/glossary/q

A basic unit of quantum information, representing either 0 or 1 but capable of being carried by a particle in both states until measured or resolved.
www.csa.com/discoveryguides/crypt/gloss.php

Images

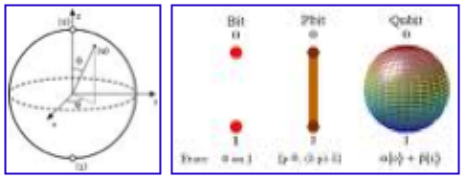

Related languages

qubit is also a word in: Portuguese

Translate to: Afrikaans

Translate

Quantum Computing: Back to basics…

Fundamental carrier of information: the **bit**

Possible bit states:

"0" or **"1"**

Fundamental carrier of quantum information: the **qubit**

Possible qubit states: any **superposition** described by the **wavefunction**

$$\psi = a\,|0\rangle + b\,|1\rangle$$

Bits and Qubits – new attributes of basic information carrier

Suppose we represent a bit by whether a single electron sits in the left well or the right well. [This has been done in quantum-dot pairs.]

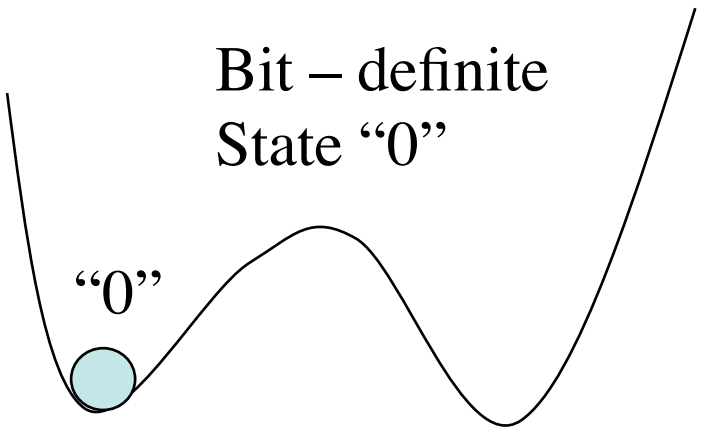

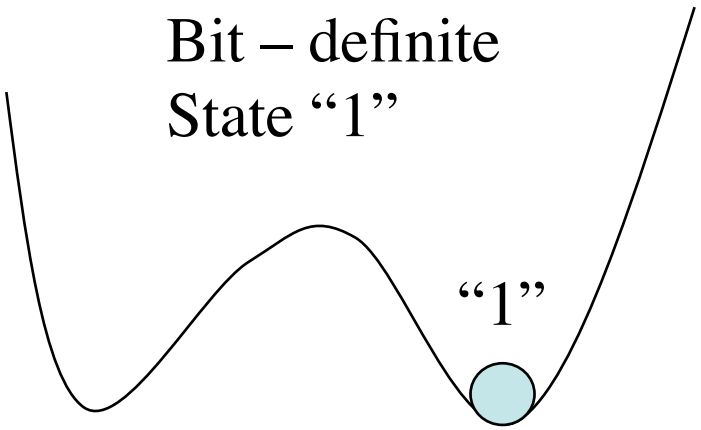

Bits and Qubits – new attributes of basic information carrier

We try to “randomize” this bit by starting with “0” and pulling down the potential barrier for long enough that the electron has a 50% chance to “jump” (tunnel?) to the right well.

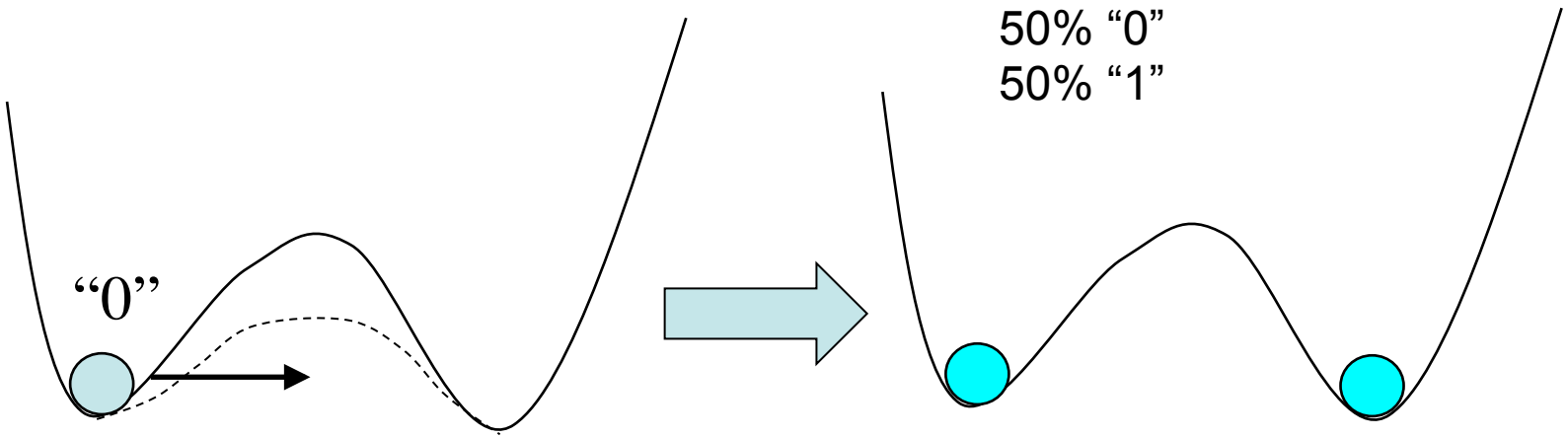

Is this state really “randomized”?

Bits and Qubits – new attributes of basic information carrier

The “randomized” state is not random at all, because if we let tunneling occur again The state goes to “1”!

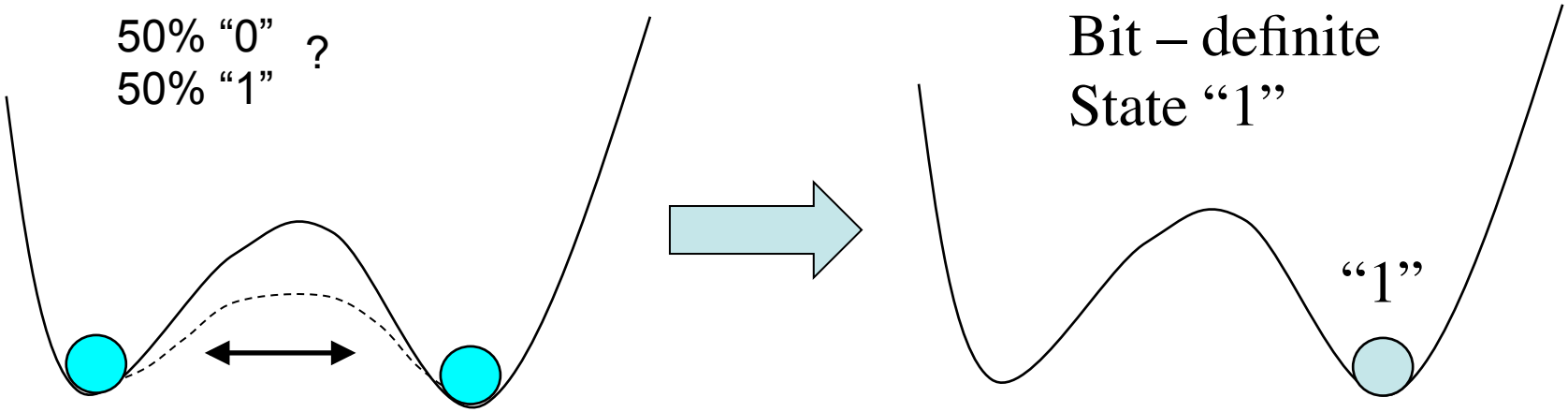

This is not a randomized state. It is a definite state, because of the wave nature of the electron. Its wave state is |0>+|1>, a superposition of bit states. If we tunnel again, we get a different wave state, |0>-|1>.

Rules for quantum computing

D. Deutsch, Proc. R. Soc. A 400, 97 (1985)

Consider this form of two-bit boolean logic gate:

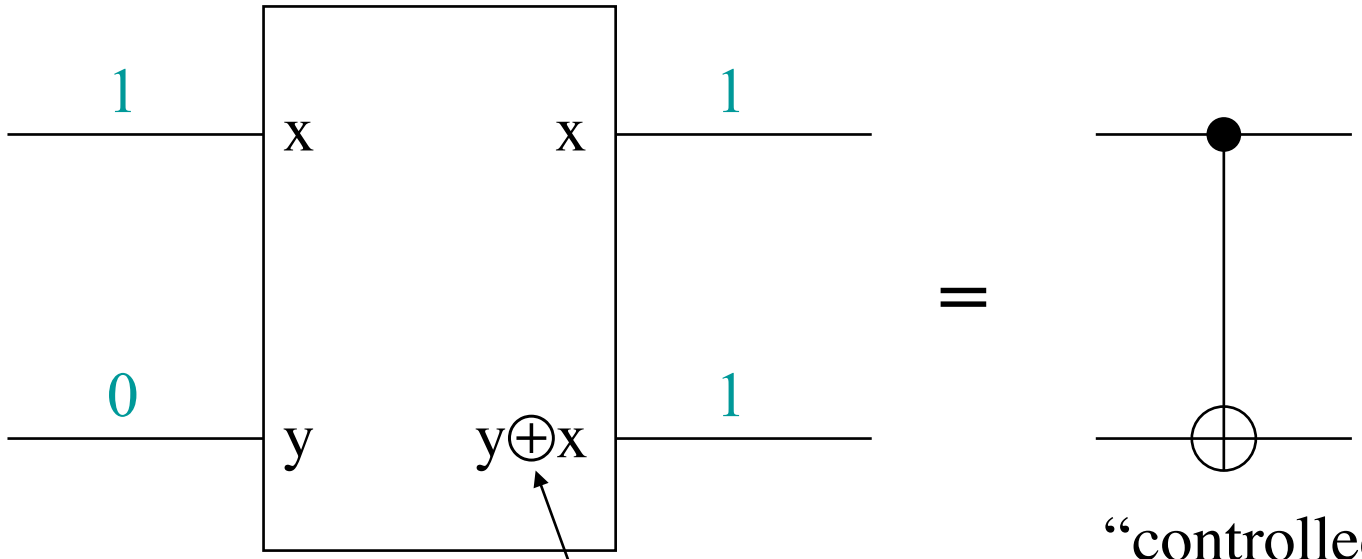

add the bits mod 2

"controlled-NOT"
(CNOT)

Rules for quantum computing

D. Deutsch, Proc. R. Soc. A 400, 97 (1985)

Quantum rules of operation :

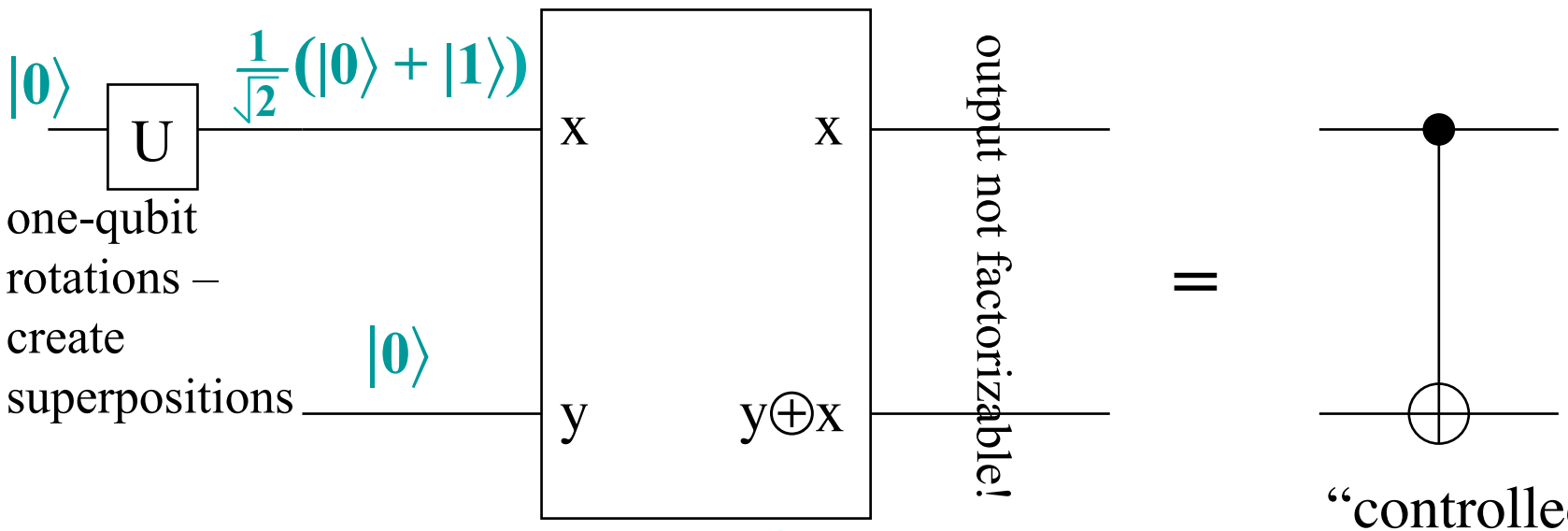

"controlled-NOT" (CNOT)

$$\psi_{in} = \frac{1}{\sqrt{2}}\left(|00\rangle + |10\rangle\right) \qquad \psi_{out} = \frac{1}{\sqrt{2}}\left(|00\rangle + |11\rangle\right)$$

Creation of entanglement

Exploiting superposition: Deutsch algorithm

Given an unknown gate, one of these four.
Does the gate have an output (lower bit) that depends on both inputs?

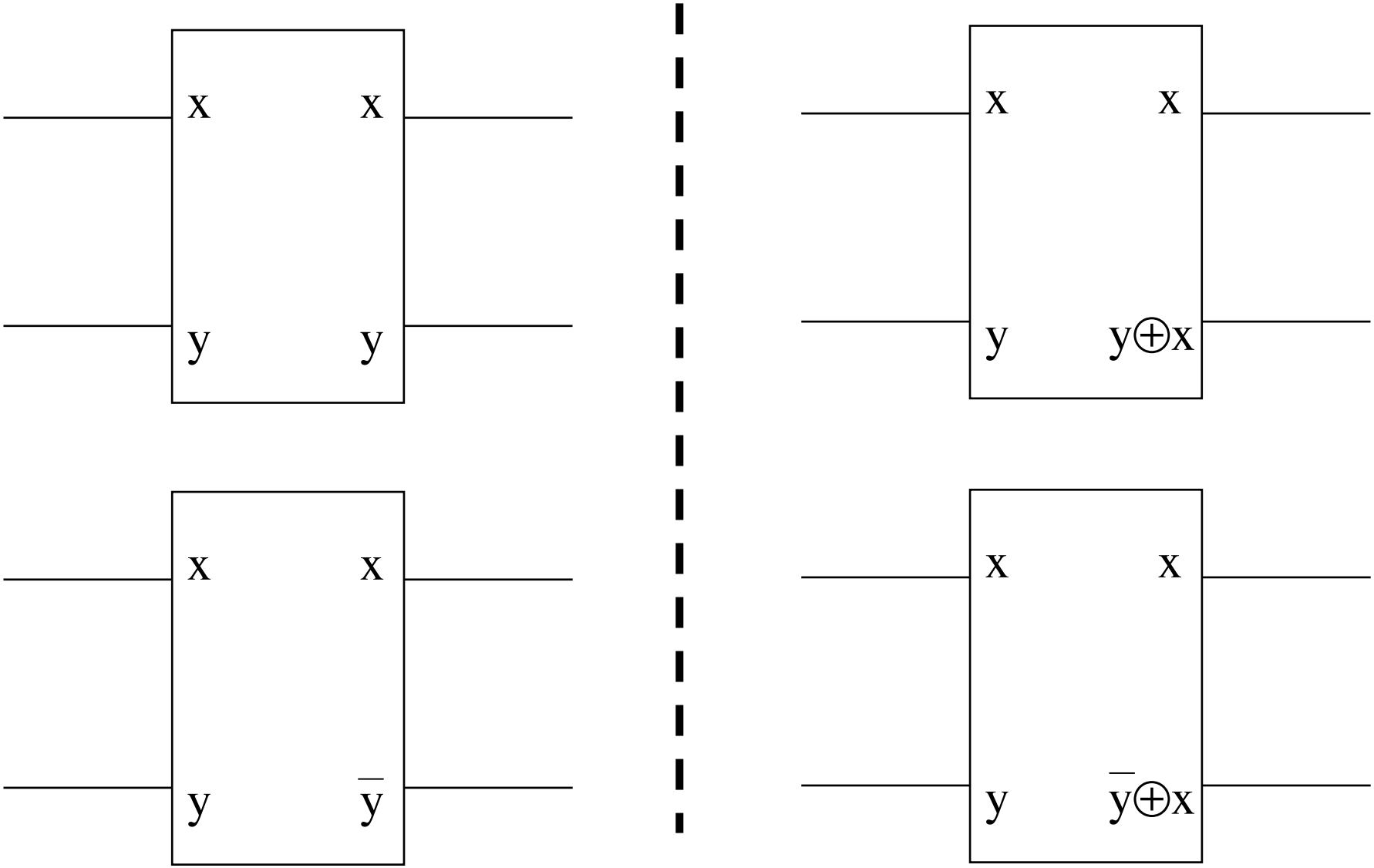

Exploiting superposition: Deutsch algorithm

Given an unknown gate, one of these four.
Does the gate have an output that depends on both inputs?

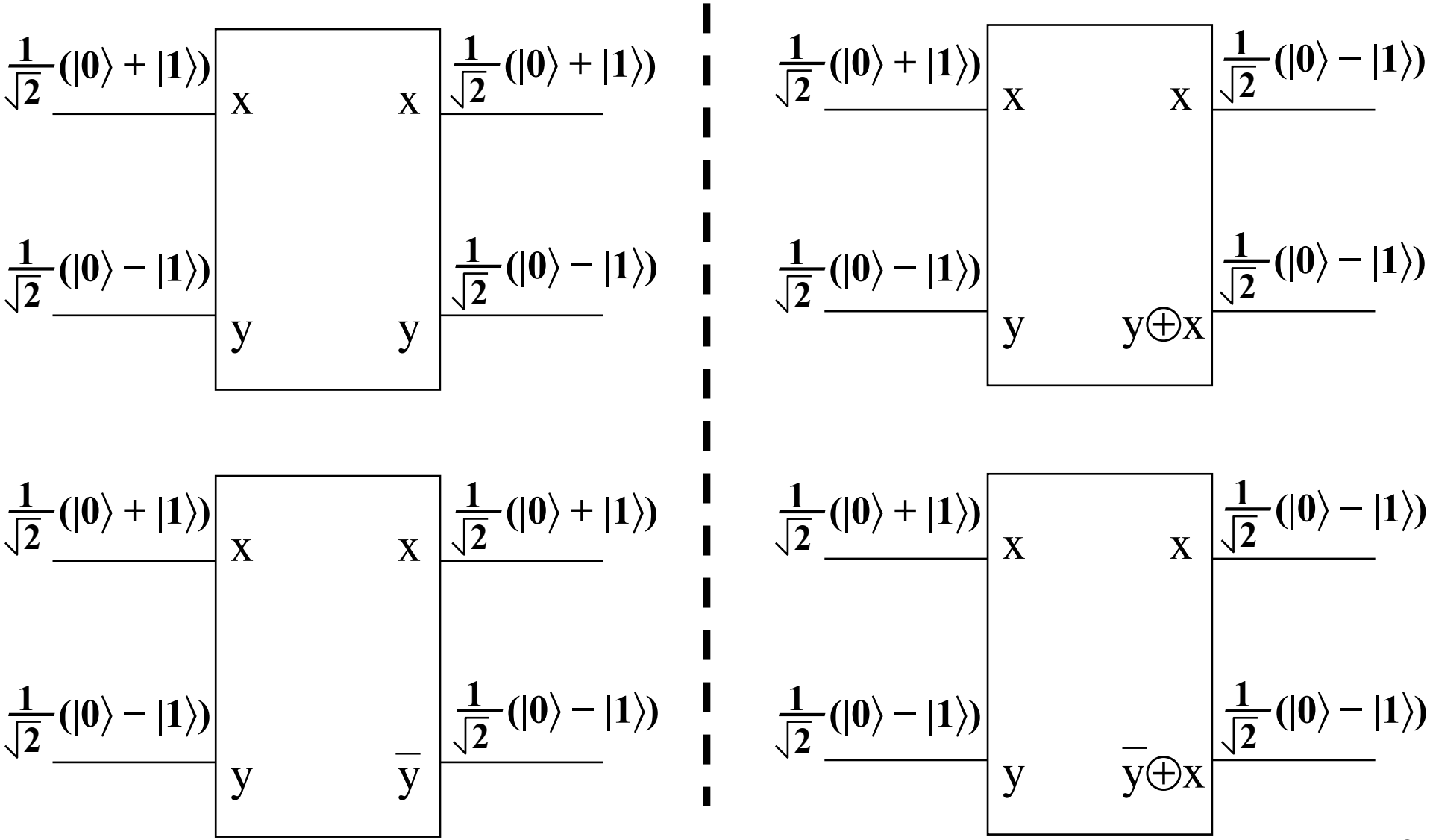

Exploiting superposition: Deutsch algorithm
Answer in quantum phase of “x” register

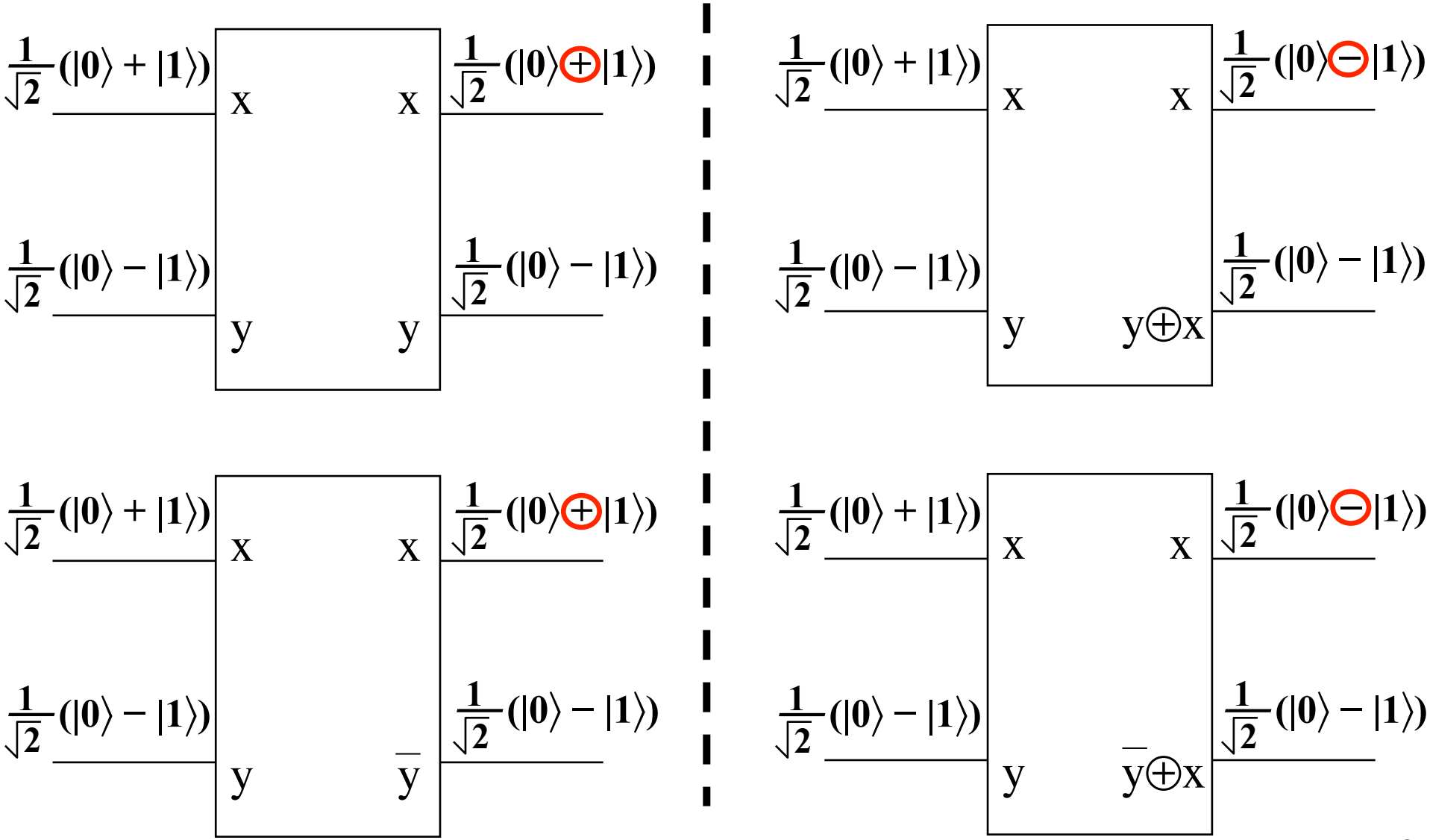

This is the prototype of the quantum cryptanalysis algorithm.

Shor -- quantum algorithm for factoring N = p.q :

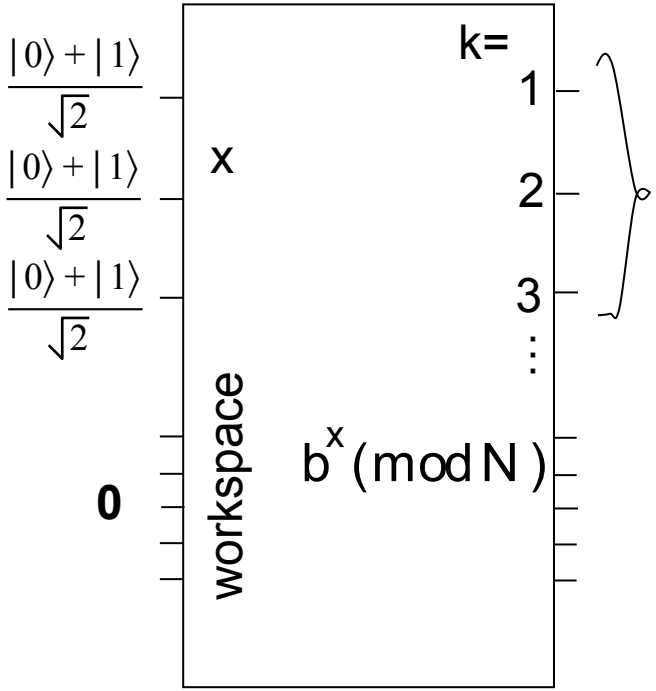

e.g., b=2

Perform quantum measurement to extract direction along axis

$$|0\rangle \pm e^{i\varphi_k}|1\rangle$$

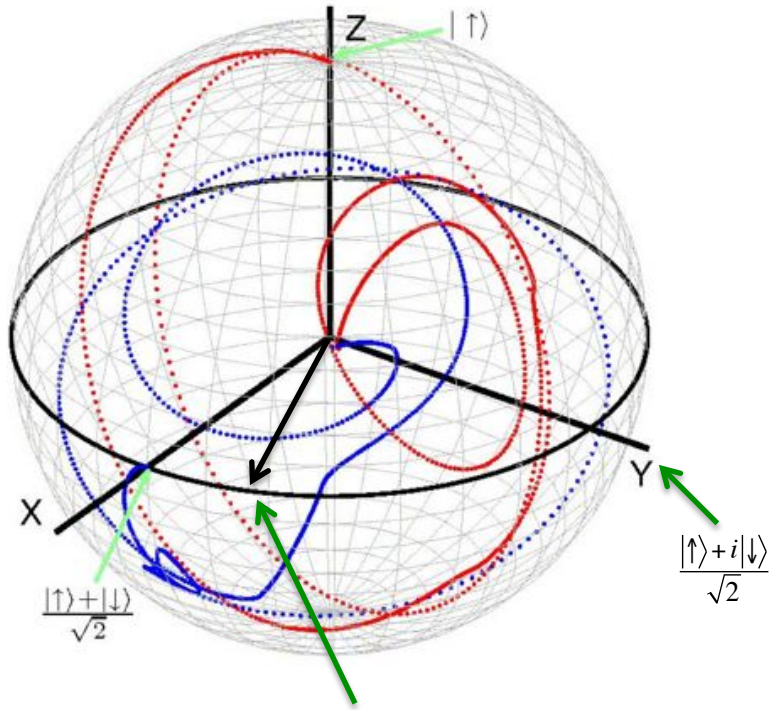

$$|0\rangle + e^{i\varphi_k}|1\rangle$$

Regular boolean-arithmetic algorithm, **but**:

-- run reversibly, and

-- preserving quantum phases

Toffoli gate:
the basis for boolean logic operations in quantum computation

$$H = \frac{1}{\sqrt{2}}\begin{pmatrix} 1 & 1 \\ 1 & -1 \end{pmatrix} \qquad \mathsf{S} = \begin{pmatrix} 1 & 0 \\ 0 & i \end{pmatrix} \qquad \mathsf{T} = \begin{pmatrix} 1 & 0 \\ 0 & e^{i\pi/4} \end{pmatrix}$$

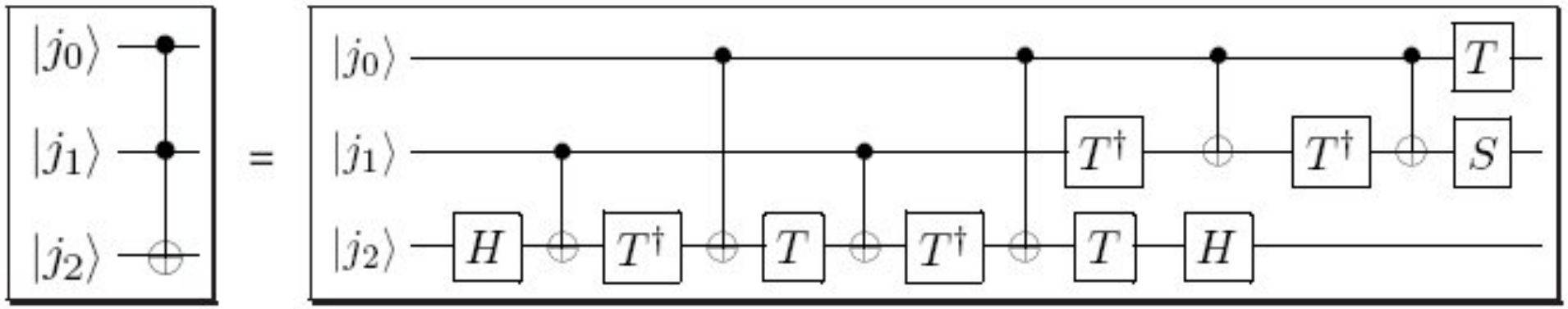

$$j_2 \Rightarrow j_2 . XOR. \left(j_0 . AND. j_1 \right)$$

- Reversible (unitary) gate containing AND, universal for boolean computation
- Composable from one- and two-qubit (CNOT) gates

Scaling of Shor algorithm:

An *n*-bit number can be factored using a quantum circuit with space-time complexity of roughly $360n^4$, so one encrypt using RSA-1024 (*n*=1K digits=3K bits) could be broken using a circuit with $O(10^{16})$ elementary logical operations.

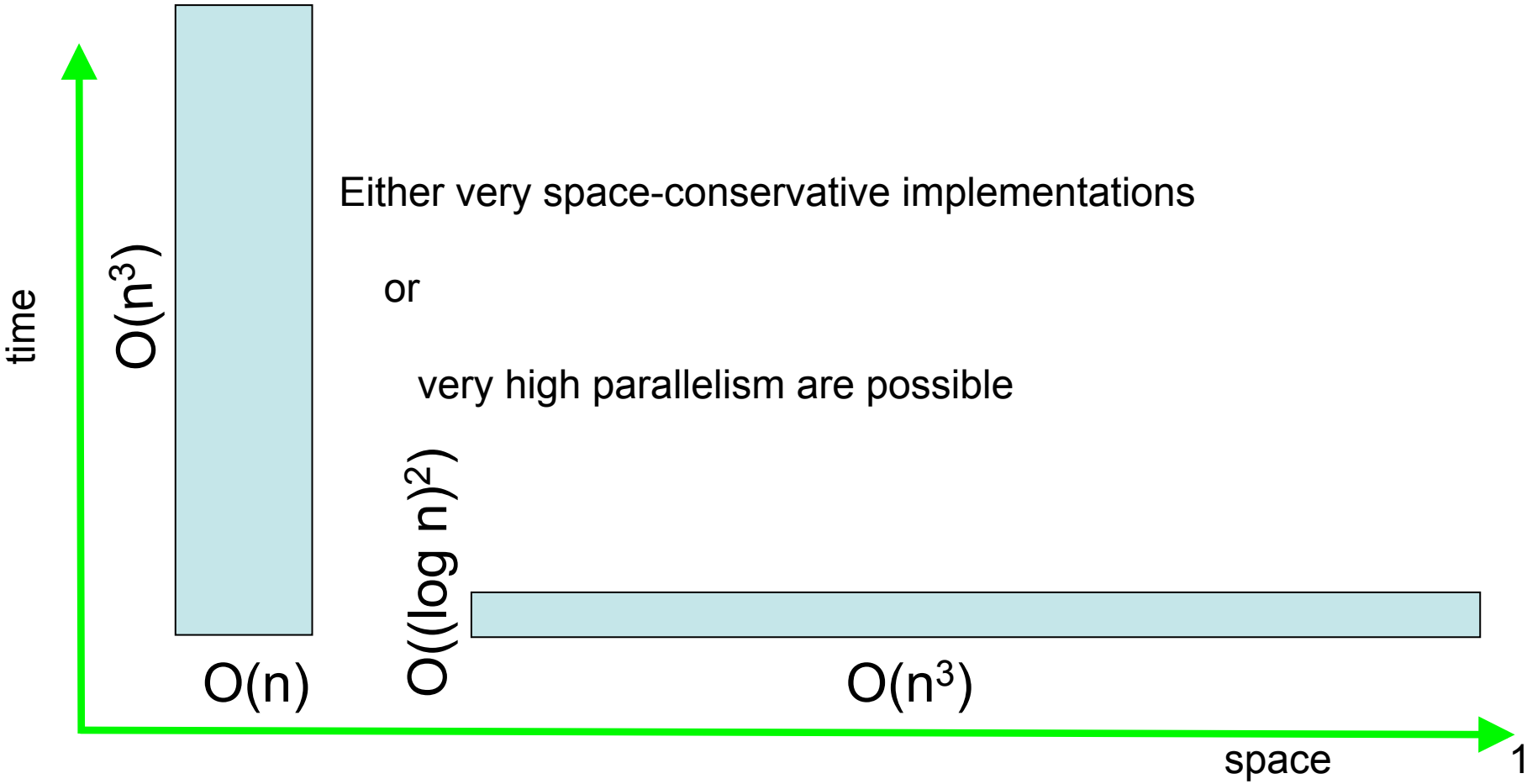

(list almost unchanged for many years)

Physical systems actively considered for quantum computer implementation

- **Liquid-state NMR**
- **NMR spin lattices**
- **Linear ion-trap spectroscopy**
- **Neutral-atom optical lattices**
- **Cavity QED + atoms**
- **Linear optics with single photons**
- **Nitrogen vacancies in diamond**
- **Topologically ordered materials**
- **Electrons on liquid He**
- **Small Josephson junctions**
  - **“charge” qubits**
  - **“flux” qubits**
- **Spin spectroscopies, impurities in semiconductors**
- **Coupled quantum dots**
  - **Qubits: spin,charge,excitons**
  - **Exchange coupled, cavity coupled**

(list almost unchanged for some years)

Physical systems actively considered for quantum computer implementation

- Liquid-state NMR
- NMR spin lattices
- Linear ion-trap spectroscopy
- Neutral-atom optical lattices
- Cavity QED + atoms
- Linear optics with single photons
- Nitrogen vacancies in diamond
- Topological qc

- Electrons on liquid He
- Small Josephson junctions
  - "charge" qubits
  - "flux" qubits
- Spin spectroscopies, impurities in semiconductors

- Coupled quantum dots
  - Qubits: spin,charge,excitons
  - Exchange coupled, cavity coupled

Five criteria for physical implementation of a quantum computer

1. Well defined extendible qubit array -stable memory
2. Preparable in the "000…" state
3. Long decoherence time (>10^4 operation time)
4. Universal set of gate operations
5. Single-quantum measurements

D. P. DiVincenzo, in Mesoscopic Electron Transport, eds. Sohn, Kowenhoven, Schoen (Kluwer 1997), p. 657, cond-mat/9612126; "The Physical Implementation of Quantum Computation," Fort. der Physik 48, 771 (2000), quant-ph/0002077.

Five criteria for physical implementation of a quantum computer & quantum communications

1. Well defined extendible qubit array -stable memory
2. Preparable in the "000…" state
3. Long decoherence time (>10^4 operation time)
4. Universal set of gate operations
5. Single-quantum measurements
6. Interconvert stationary and flying qubits
7. Transmit flying qubits from place to place

1. Qubit requirement

- Two-level quantum system, state can be

$$\psi = a\,|0\rangle + b\,|1\rangle$$

- Examples: superconducting flux state, Cooper-pair charge, electron spin, nuclear spin, exciton
- In fact, many of these qubits have

$$\psi = a|0\rangle + b|1\rangle + c|2\rangle + \ldots$$

Going into the 2 state is called “leakage”, and should be avoided, or at least controlled.

1. Qubit requirement (cont.)

- Possible state of array of qubits (3):

$$\psi = a\,|000\rangle + b\,|001\rangle + c\,|010\rangle + \ldots$$

  - "entangled" state—not a × of single qubits
  - 2^3=8 terms total, all states must be accessible (superselection restrictions not desired)
  - Qubits must have "resting" state in which state is unchanging: Hamiltonian $H = 0$ (effectively).

1. Qubit requirement

- Two-level quantum system, state can be

$$\psi = a\,|0\rangle + b\,|1\rangle$$

- Examples: superconducting flux state, Cooper-pair charge, electron spin, nuclear spin, exciton
- **Warning: A qubit is not a natural concept in quantum physics. Hilbert space is much, much larger. How to achieve?**

Example of problem: Solid State Hilbert Spaces

- Position of each electron is element of Hilbert space
- Fock vector basis (second quantization), e.g.,

  $|0000101010000\ldots\rangle$
- Looks like large infinity of qubits.
- Additional part of Hilbert space:
  - electron spin --- doubles the number of modes of our Fock space
  - nuclear spin --- completely separate degrees of freedom, very important in solid state context
  - nuclear positions: "phonons", we will not use

Many others we will not use…

Solid State Hilbert Spaces

- Strategy to get a qubit:
  - restrict to "low energy sector". Still exponentially big in number of electrons
  - now Fock vectors are in terms of orbitals, not positions
  - identify orthogonal states that differ *slightly* , i.e., electron moved from one orbital to another, or one spin flipped. This pair is a good candidate for a qubit:
    - Fermionic statistics don't matter (no superselection)
    - decoherence is weak
    - Hamiltonian parameters can (hopefully) be determined very accurately

2. Initialization requirement

- Initial state of qubits should be

$$\psi = |000000\ldots\rangle$$

Achieve by cooling, e.g., spins in large B field

- $T = \Delta/\log(10^4) = \Delta/4$ (Δ= energy gap)
- Error correction: fresh |0> states needed throughout course of computation
  - Thermodynamic idea: pure initial state is "low temperature" (low entropy) bath to which heat, produced by noise, is expelled

4. Universal Set of Quantum Gates

- Quantum algorithms are specified as sequences of unitary transformations U_1, U_2, U_3, each acting on a small number of qubits
- Each U is generated by a time-dependent Hamiltonian:

$$U_\alpha = \exp(i\int dt H_\alpha(t)/\hbar)$$

- Different Hamiltonians are needed to generate the desired quantum gates:

$$cNOT \Rightarrow H \propto \sigma_{zi}\sigma_{zj} \quad \text{“Ising”}$$

$$\text{1-bit gate} \Rightarrow H \propto \sigma_{xi}, \sigma_{yi}$$

- many different “repertoires” possible
- integrated strength of H should be very precise, 1 part in 10^{-3}, from current understanding of error correction

(but, see topological quantum computing (Kitaev, 1997))

Gate operations with quantum dots (1):

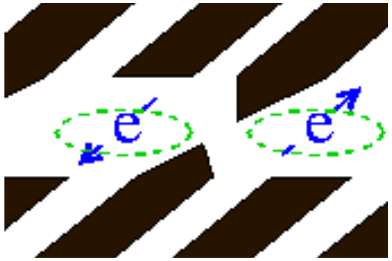

--two-qubit gate:

Use the side gates to move electron positions horizontally, changing the wavefunction overlap

Pauli exclusion principle produces spin-spin interaction:

$$H = JS_1 \cdot S_2 = J(\sigma_{x1}\sigma_{x2} + \sigma_{y1}\sigma_{y2} + \sigma_{z1}\sigma_{z2})$$

Model calculations (Burkard, Loss, DiVincenzo, PRB, 1999)
For small dots (40nm) give *J= 0.1meV,* giving a time for the "square root of swap" of

t= 40 psec

NB: interaction is very short ranged, off state is accurately *H=0*.

Making the CNOT from exchange:

Exchange generates the "SWAP" operation:

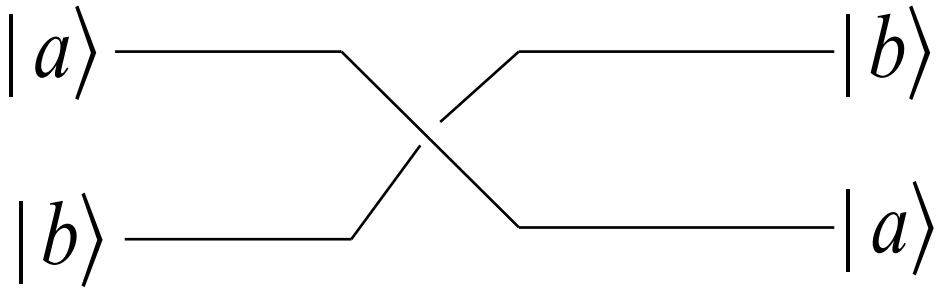

More useful is the "square root of swap", $\sqrt{S}$

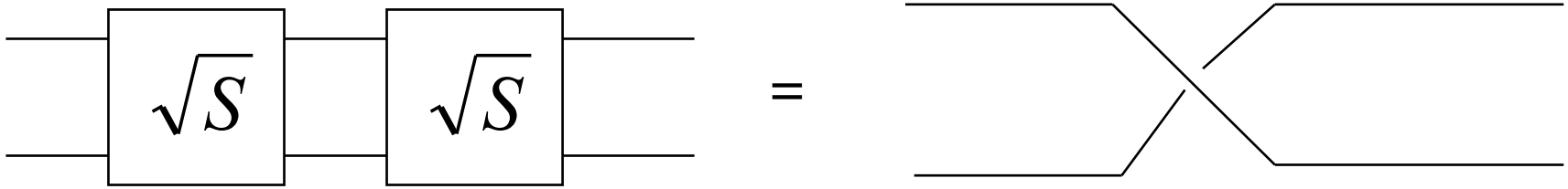

Using SWAP:

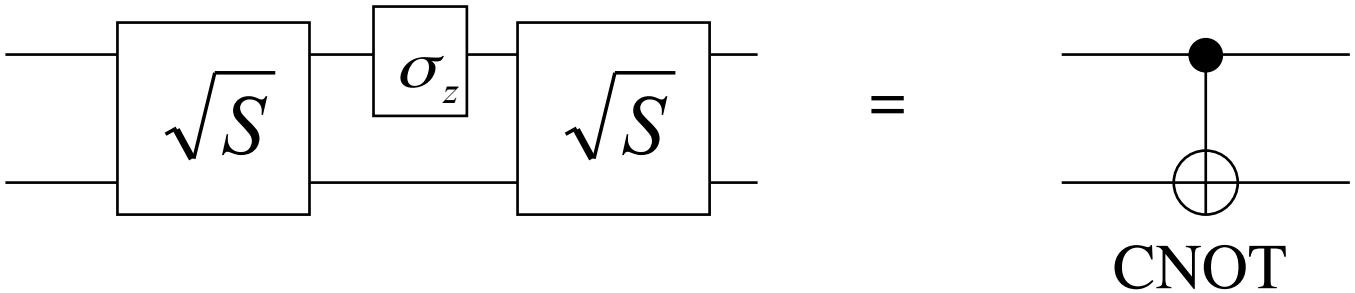

(up to single-qubit gates)

Lecture 2: Real quantum measurements, quantum coherence, error correction, and fault tolerance

Quantum–dot array proposal:

Loss & DiVincenzo, Phys. Rev. A 57, 120 (1998).

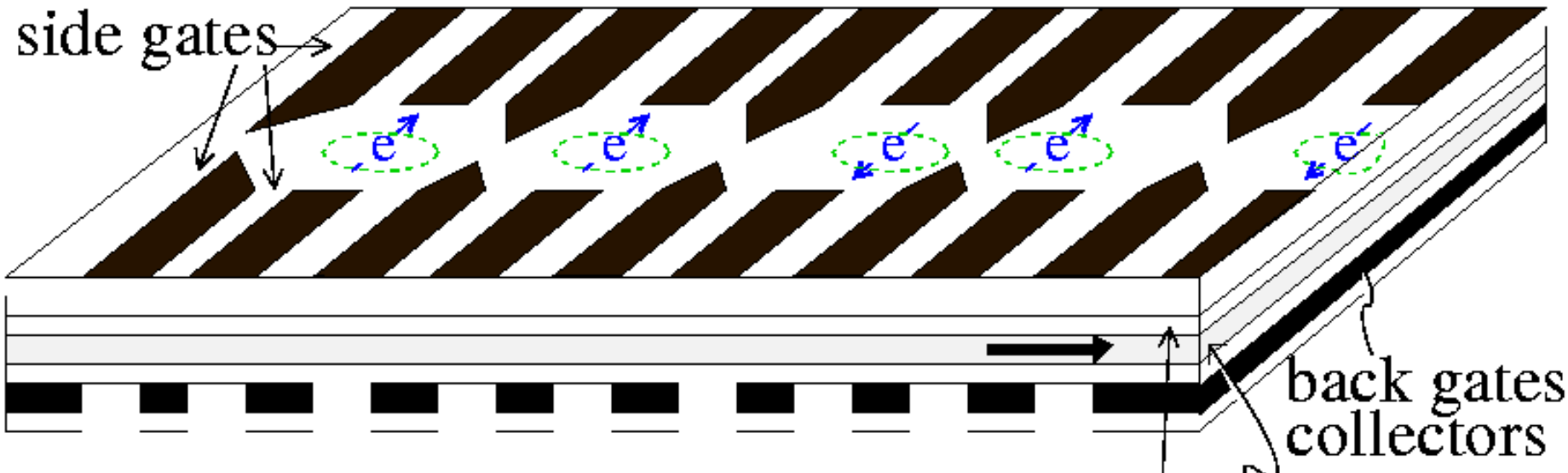

–quantum dots defined in 2DEG by side gates
–Coulomb blockade used to fix electron number at one per dot
–spin of electron is qubit
–gate operations: controllable coupling of dots by point–contact gate voltage
–readout by gatable magnetic barrier

Gate operations with quantum dots (2):

--one-qubit gate:

Desired Hamiltonian is:

$$H = g\mu_B S \cdot B = g\mu_B (B_x \sigma_x + B_y \sigma_y + B_z \sigma_z)$$

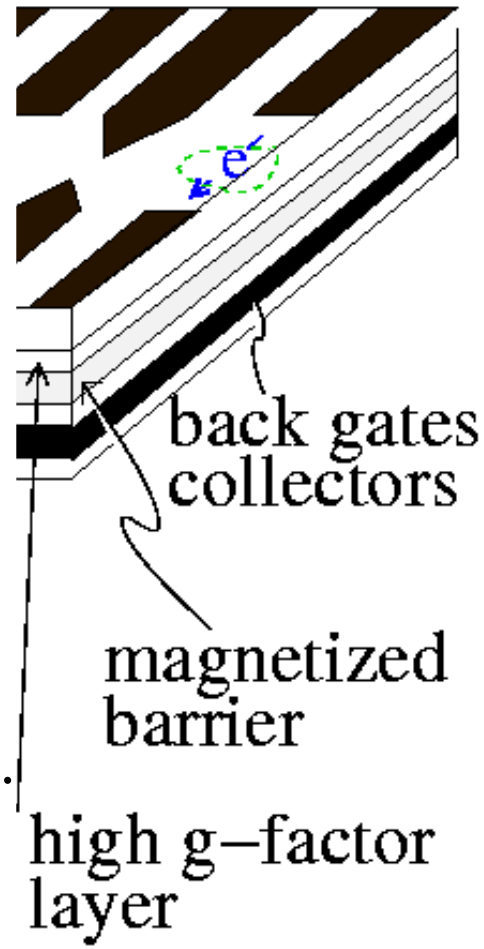

One approach: use back gate to move electron vertically. Wavefunction overlap with magnetic or high g-factor layers produces desired Hamiltonian.

If B_{eff}= 1T, *t=160 psec*
If B_{eff}= 1mT, ***t= 160 nsec***

Can we get CNOT with just Heisenberg exchange?

Conventional answer– NO:

--because Heisenberg interaction has too much symmetry
--it cannot change
S (total angular momentum quantum number)
S_z (z component of total angular momentum)

Correct answer (Berkeley, MIT, Los Alamos) – YES:

--the trick: encode qubits in states of specific angular momentum quantum numbers

Specific scheme to get quantum gates with just Heisenberg exchange:

NATURE | VOL 408 | 16 NOVEMBER 2000

Universal quantum computation with the exchange interaction

D. P. DiVincenzo*, D. Bacon†‡, J. Kempe†§‖, G. Burkard¶ & K. B. Whaley†

** IBM Research Division, T. J. Watson Research Center, Yorktown Heights, New York 10598, USA*
† Department of Chemistry, ‡ Department of Physics, § Department of Mathematics, University of California, Berkeley, California 94720, USA
‖ École Nationale Superieure des Télécommunications, 46 rue Barrault, 75634 Paris Cedex 13, France
¶ Department of Physics and Astronomy, University of Basel, Klingelbergstrasse 82, CH-4056 Basel, Switzerland

Most economical coding scheme:
1 qubit = 3 spins:

$$|0\rangle_L \propto |\uparrow\downarrow\uparrow\rangle - |\downarrow\uparrow\uparrow\rangle$$

$$= \left(|\uparrow\downarrow\rangle - |\downarrow\uparrow\rangle\right)|\uparrow\rangle$$ (i.e., singlet times spin-up)

$$|1\rangle_L \propto 2|\uparrow\uparrow\downarrow\rangle - |\uparrow\downarrow\uparrow\rangle - |\downarrow\uparrow\uparrow\rangle$$ (triplet on first two spins)

Because quantum numbers are fixed ($S=1/2$, $S_z=+1/2$), all gates on These logical qubits can be performed using SWAP:

Economical coded-gate implementations—results of simulations

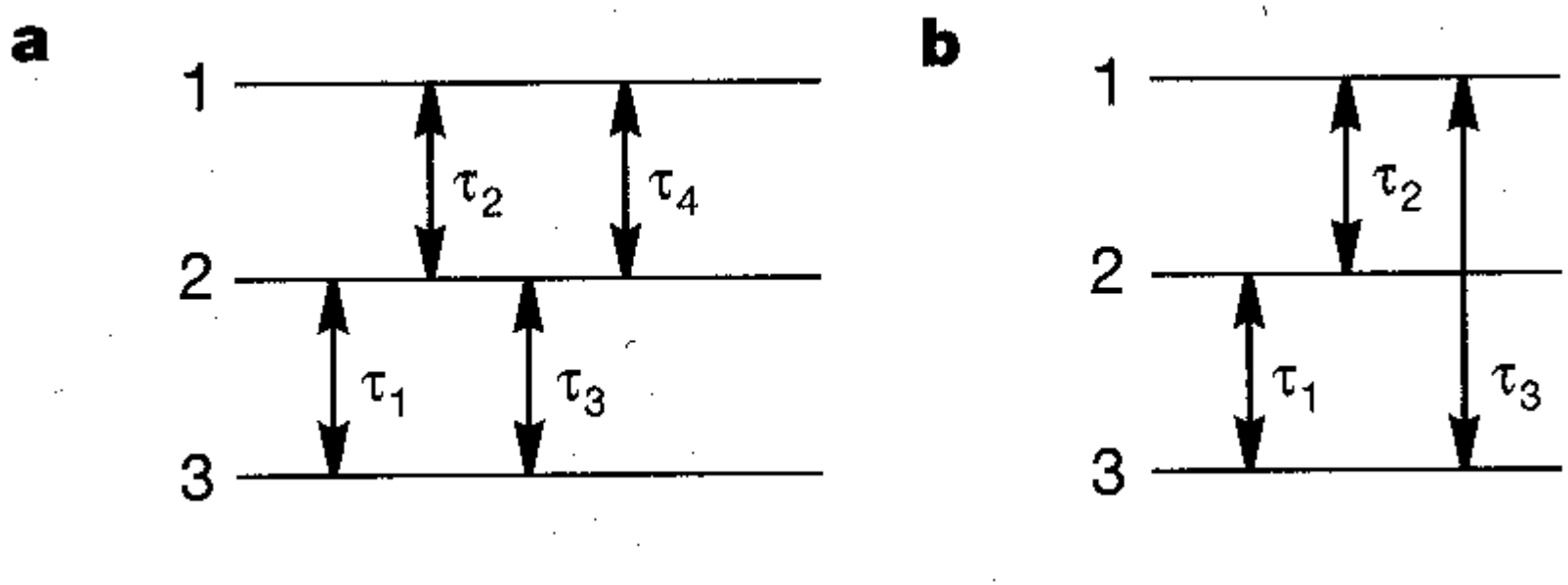

By varying interactions times shown,
all 1-qubit gates on coded qubits can be obtained with no more than 4 exchange operations (if only nearest-neighbor interactions) or 3 exchange interactions (if interactions between spin 1 and spin 3 are possible)

CNOT on two coded qubits

-minimal solution
19 interactions,
doable in 13 time steps

-essentially unique

-gate accuracy c.10^{-5}
with precision shown

-nearest-neighbor
seems best

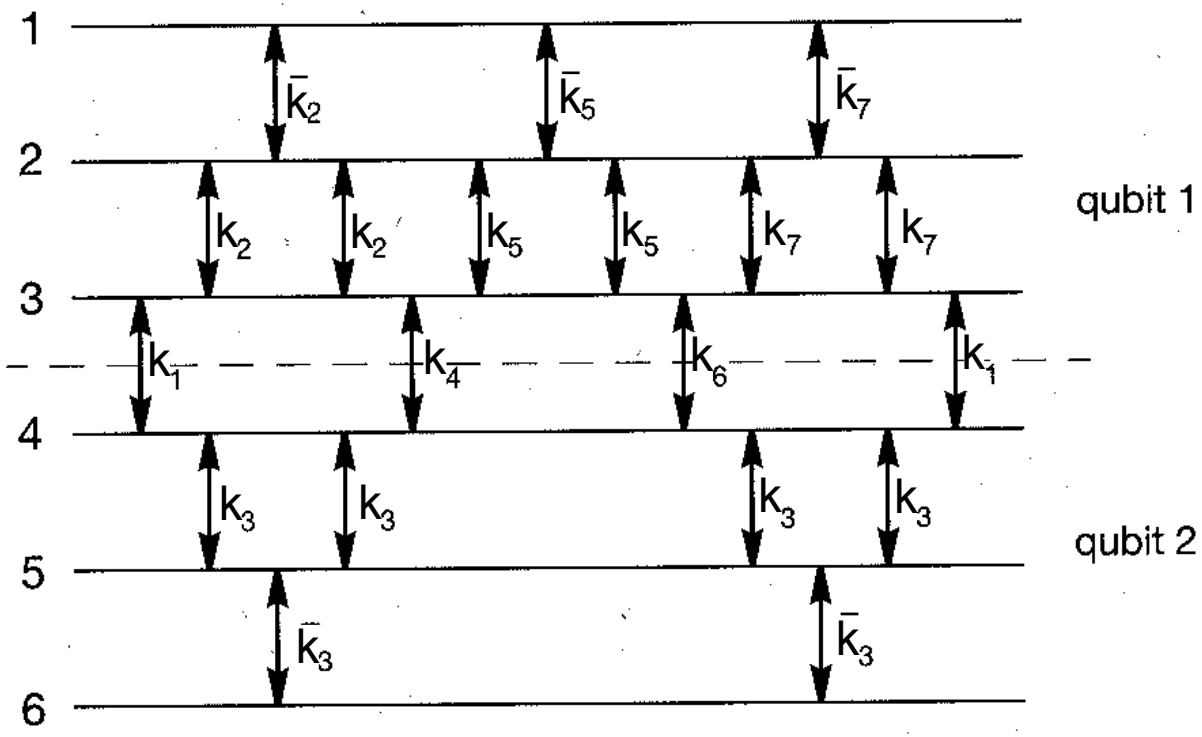

k_1=0.410899(2)
k_2=0.207110(20)
k_3=0.2775258(12)
k_4=0.640505(8)
k_5=0.414720(10)
k_6=0.147654(12)
k_7=0.813126(12)
$\tan(\pi k_i)\tan(\pi \bar{k}_i) = -2$

CNOT on two coded qubits

-minimal solution
19 interactions,
doable in 13 time steps

-essentially unique

-gate accuracy c.10^{-5}
with precision shown

-nearest-neighbor
seems best

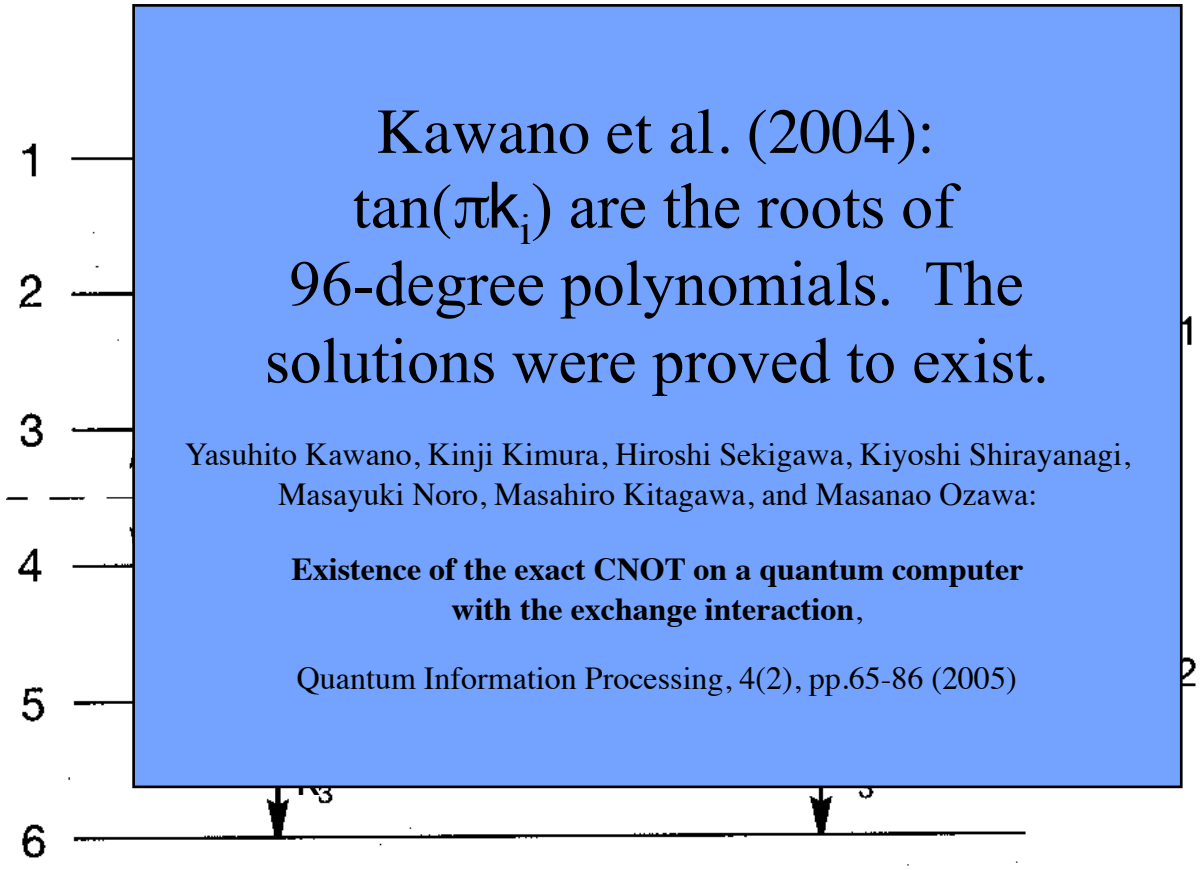

Kawano et al. (2004):
$\tan(\pi k_i)$ are the roots of
96-degree polynomials. The
solutions were proved to exist.

Yasuhito Kawano, Kinji Kimura, Hiroshi Sekigawa, Kiyoshi Shirayanagi, Masayuki Noro, Masahiro Kitagawa, and Masanao Ozawa:

Existence of the exact CNOT on a quantum computer with the exchange interaction,

Quantum Information Processing, 4(2), pp.65-86 (2005)

k_1=0.410899(2)
k_2=0.207110(20)
k_3=0.2775258(12)
k_4=0.640505(8)

k_5=0.414720(10)
k_6=0.147654(12)
k_7=0.813126(12)
$\tan(\pi k_i)\tan(\pi \bar{k}_i) = -2$

Simple features of scheme for coded computation

--Initialization: turn on uniform B field and strong antiferromagnetic Heisenberg exchange between spins 1 and 2. Then

$$\left|0\right\rangle_L \propto \left(\left|\uparrow\downarrow\right\rangle - \left|\downarrow\uparrow\right\rangle\right)\left|\uparrow\right\rangle$$

is the ground state of the system.

--Measurement: coded qubit is measured by determining whether spins 1 and 2 are in a relative singlet or triplet. Somewhat easier than single-spin measurements.

5. Measurement requirement

- Ideal quantum measurement for quantum computing:

For the selected qubit:

if its state is |0>, the classical outcome is always **"0"**

if its state is |1>, the classical outcome is always **"1"**

(100% quantum efficiency)

- If quantum efficiency is not perfect but still large (e.g. 50%), desired measurement is achieved by "copying" (using cNOT gates) qubit into several others and measuring all.
- If q.e. is very low, quantum computing can still be accomplished using ensemble technique (cf. bulk NMR)
- Fast measurements (10^{-4} of decoherence time) permit easier error correction, but are not absolutely necessary

Electron spins in quantum dots

Top-Gated Quantum Dots

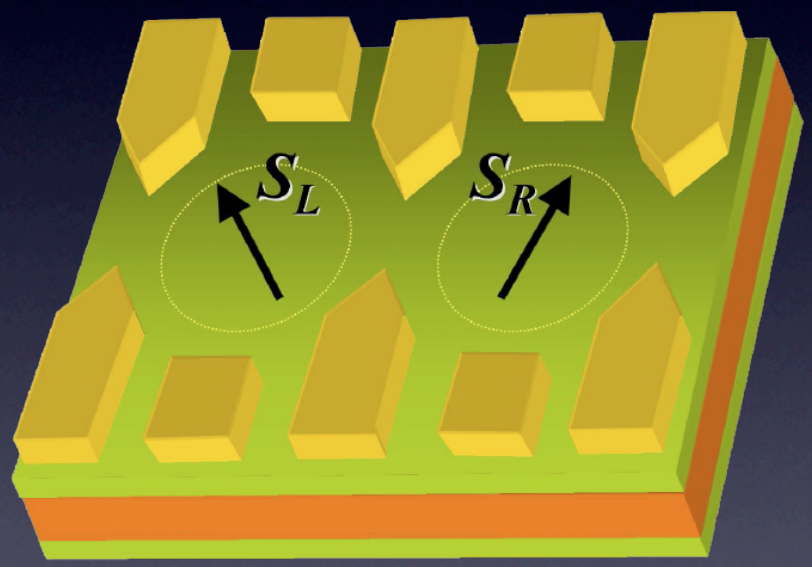

- Spin up and spin down are qubit 1 and 0.
- One electron per dot
- Qubit rotations using ESR
- Exchange enables swap operations

D. Loss and D.P. DiVincenzo, Phys. Rev. A **57**, 120 (1998)

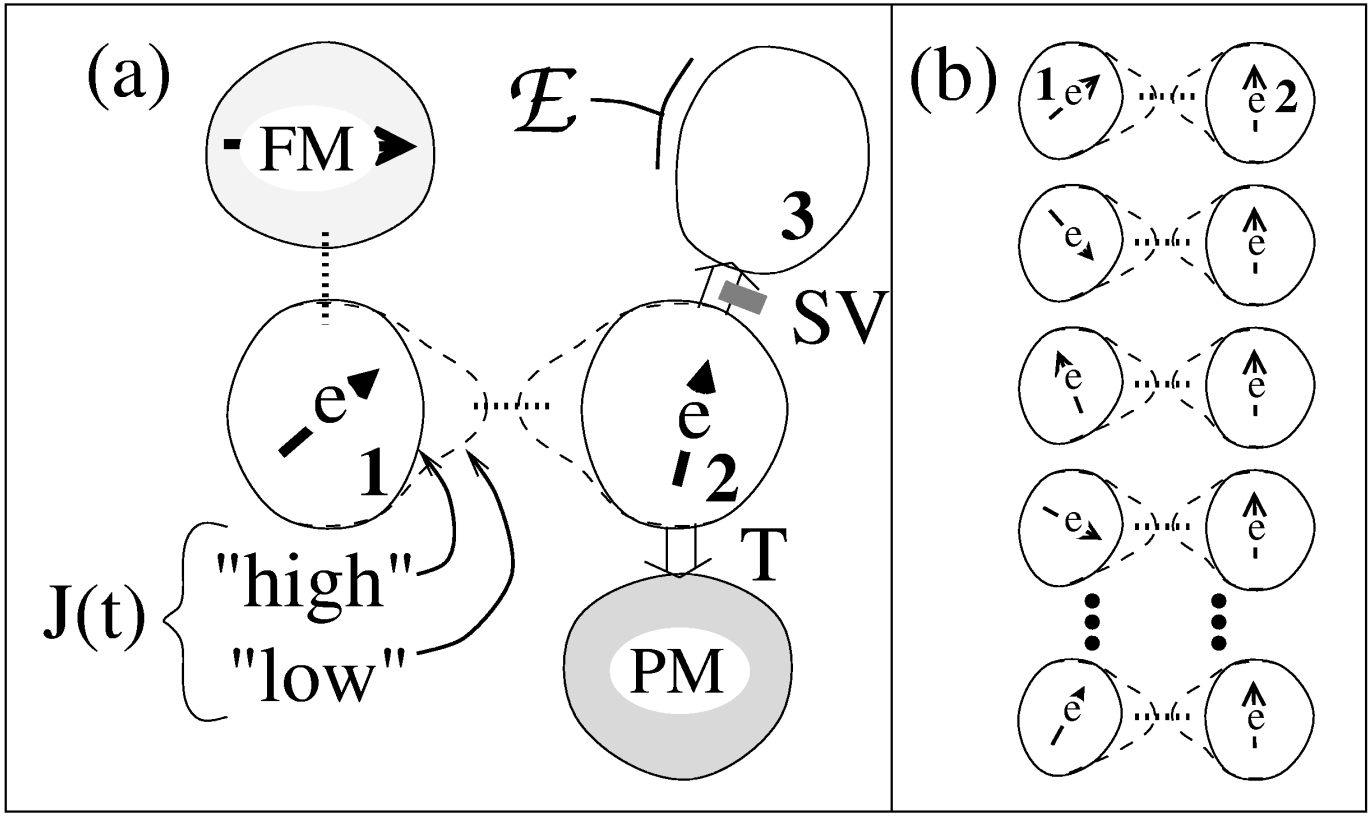

Loss & DiVincenzo
quant-ph/9701055

FIG. 1. a) Schematic top view of two coupled quantum dots labeled 1 and 2, each containing one single excess electron (e) with spin 1/2. The tunnel barrier between the dots can be raised or lowered by setting a gate voltage "high" (solid equipotential contour) or "low" (dashed equipotential contour). In the low state virtual tunneling (dotted line) produces a time-dependent Heisenberg exchange $J(t)$. Hopping to an auxiliary ferromagnetic dot (FM) provides one method of performing single-qubit operations. Tunneling (T) to the paramagnetic dot (PM) can be used as a POV read out with 75% reliability; spin-dependent tunneling (through "spin valve" SV) into dot 3 can lead to spin measurement via an electrometer $\mathcal{E}$. b) Proposed experimental setup for initial test of swap-gate operation in an array of many non-interacting quantum-dot pairs. Left column of dots is initially unpolarized while right one is polarized; this state can be reversed by a swap operation (see Eq. (31)).

In this quantum dot device, the group at Delft showed
a spin qubit and achieved single-spin measurement on demand.

J. M. Elzerman, R. Hanson, L. H. Willems van Beveren,
B. Witkamp, L. M. K. Vandersypen, L. P. Kouwenhoven,
Nature **430**, 431 (2004)

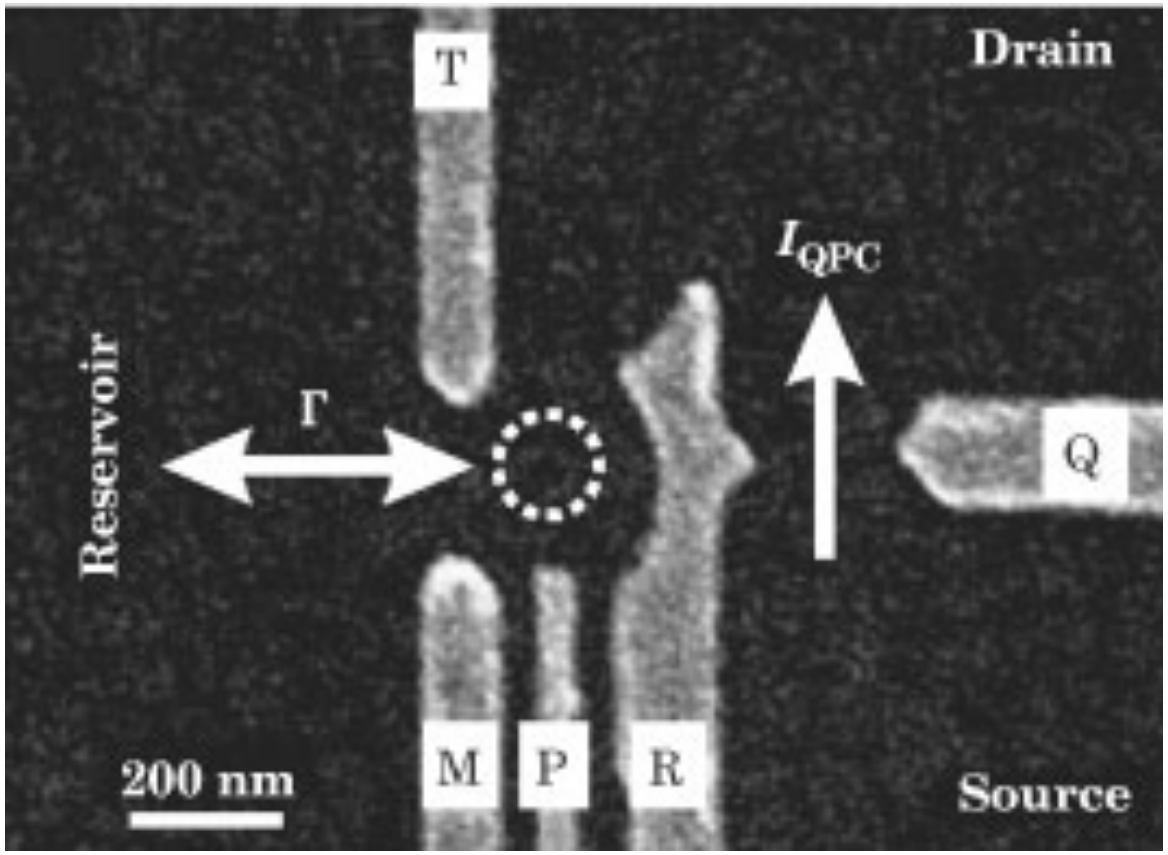

Single spin measurement achieved by Delft group (Elzerman, Vandersypen, Hansen, Kouwenhoven, 2004)

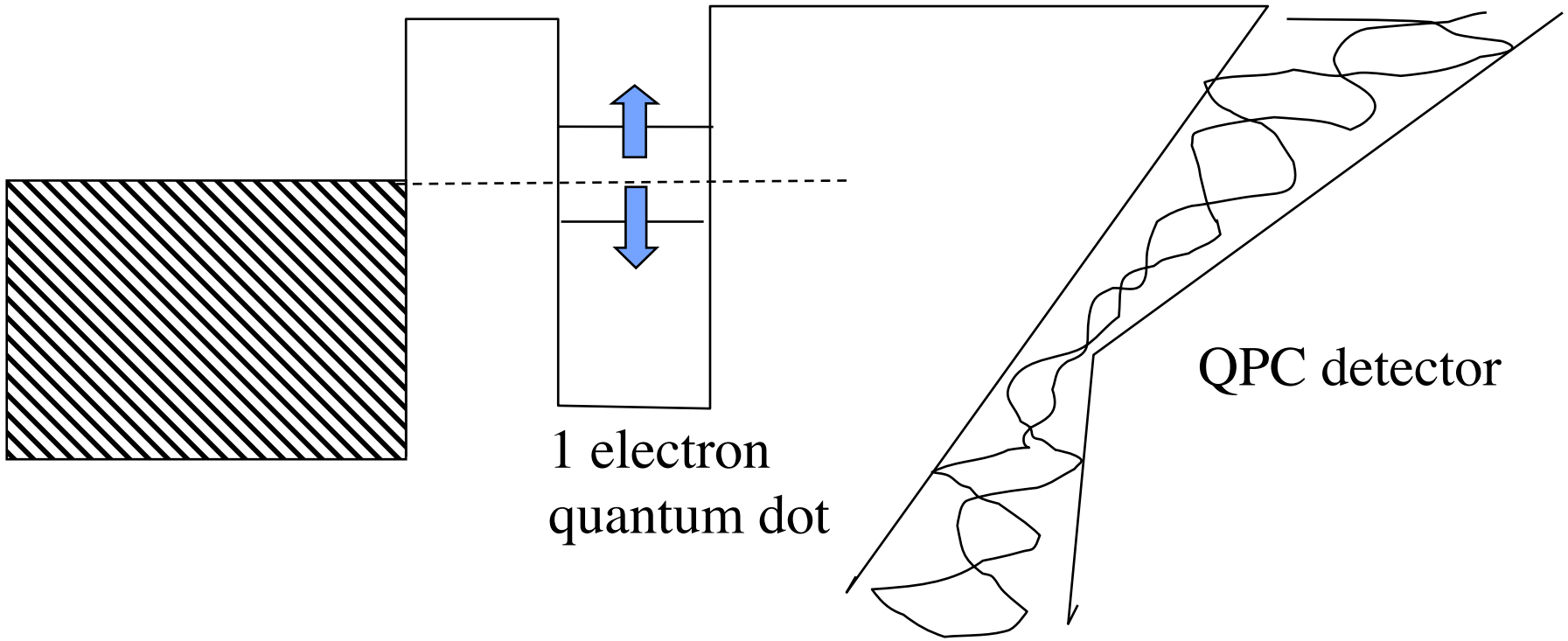

Variant on spin-charge conversion mechanism.

Details of single spin measurement scheme

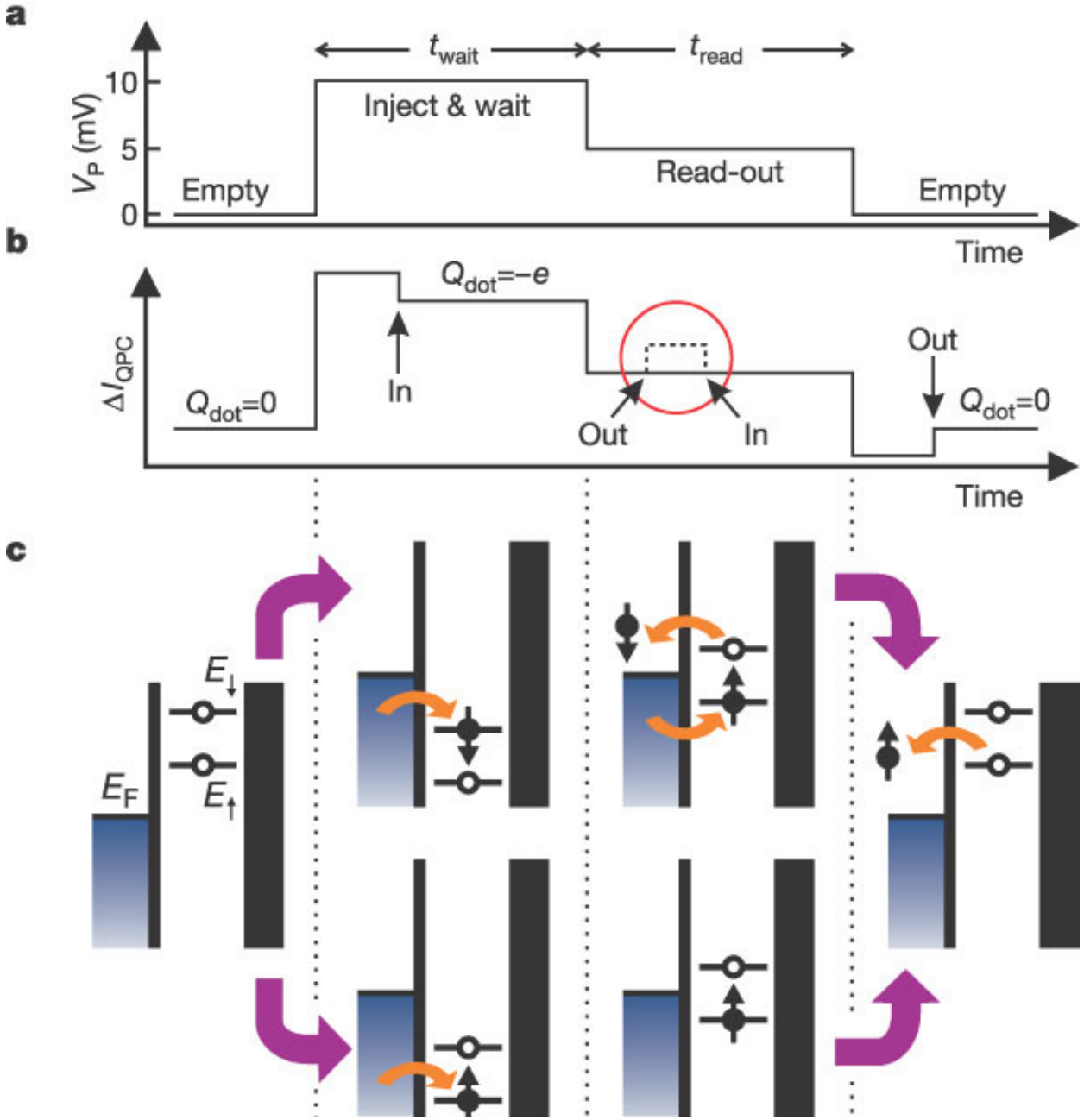

3. Decoherence times

- T_2 lifetime can be observed experimentally
- Very device and material specific!
- E.g., T_2=0.6 μsec for Saclay Josephson junction qubit (shown)
- T_2 measures time for spin system to evolve from

$$\psi = 1/\sqrt{2}\,(|\uparrow\rangle + |\downarrow\rangle)$$

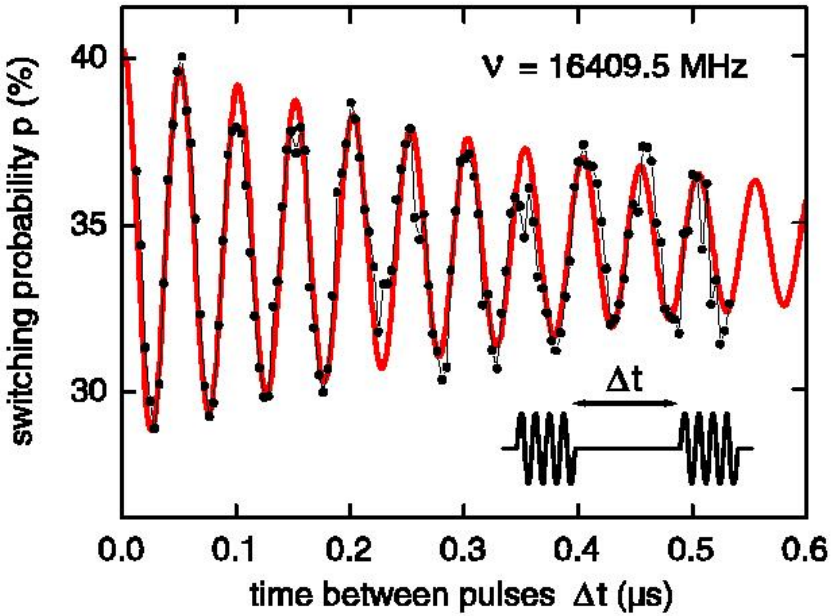

Vion et al, Science, 2002

to a 50/50 mixture of |up-up> and |down-down>. This happens if the qubit becomes entangled with a spin in the environment, e.g.,

$$\psi = \frac{1}{\sqrt{2}}(|\uparrow\rangle + |\downarrow\rangle)\,|\uparrow\rangle \Rightarrow \frac{1}{\sqrt{2}}(|\uparrow\uparrow\rangle + |\downarrow\downarrow\rangle)$$

There is much more to be said about this!!

small

Decoherence analysis
e.g., the spin-boson model, (Caldeira-Leggett)

General system-bath Hamiltonian:

$$\mathcal{H} = \mathcal{H}_S + \mathcal{H}_B + \mathcal{H}_{SB},$$

$$\mathcal{H}_B = \frac{1}{2}\sum_\alpha \left(\frac{p_\alpha^2}{m_\alpha} + m_\alpha \omega_\alpha^2 x_\alpha^2 \right),$$

$$\mathcal{H}_{SB} = \mathbf{m} \cdot \boldsymbol{\varphi} \sum_\alpha c_\alpha x_\alpha + \Delta U(\boldsymbol{\varphi}),$$

Idea: system does not evolve in isolation, there is a large “bath” (harmonic oscillator bath shown here), and there is coupling to the bath. A set of standard approximations to this evolution (master equation, Born-Markov approximation, two-level system) gives:

small

Relaxation times
the spin-boson model, Caldeira-Leggett

$$\frac{1}{T_2} = \frac{1}{2T_1} + \frac{1}{T_\phi}$$

$$\begin{aligned}
\mathcal{H} &= \mathcal{H}_S + \mathcal{H}_B + \mathcal{H}_{SB}, \\
\mathcal{H}_B &= \frac{1}{2}\sum_\alpha \left(\frac{p_\alpha^2}{m_\alpha} + m_\alpha \omega_\alpha^2 x_\alpha^2 \right), \\
\mathcal{H}_{SB} &= \mathbf{m}\cdot\boldsymbol{\varphi} \sum_\alpha c_\alpha x_\alpha + \Delta U(\boldsymbol{\varphi}),
\end{aligned}$$

$$\frac{1}{T_1} = 4|\langle 0|\mathbf{m}\cdot\boldsymbol{\varphi}|1\rangle|^2 J(\omega_{01}) \coth \frac{\omega_{01}}{2k_B T}, \qquad (124)$$

$$\frac{1}{T_\phi} = |\langle 0|\mathbf{m}\cdot\boldsymbol{\varphi}|0\rangle - \langle 1|\mathbf{m}\cdot\boldsymbol{\varphi}|1\rangle|^2 \left.\frac{J(\omega)}{\omega}\right|_{\omega\to 0} 2k_B T. \qquad (125)$$

$$J(\omega) = \frac{\pi}{2}\sum_\alpha \frac{c_\alpha^2}{m_\alpha \omega_\alpha}\delta(\omega - \omega_\alpha); \qquad (90)$$

BKD, Phys. Rev. B **69**, 064503 (2004)

PHYSICAL REVIEW A

ATOMIC, MOLECULAR, AND OPTICAL PHYSICS

IES, VOLUME 52, NUMBER 4 OCTOBER 1995

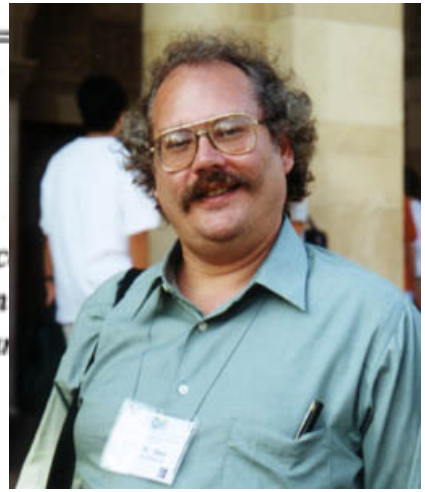

RAPID COMMUNICATIONS

*Communications section is intended for the accelerated publication of important new results. Sinc
are given priority treatment both in the editorial office and in production, authors should explain
justifies this special handling. A Rapid Communication should be no longer than 4 printed pages a
t. Page proofs are sent to authors.*

Scheme for reducing decoherence in quantum computer memory

Peter W. Shor*

AT&T Bell Laboratories, Room 2D-149, 600 Mountain Avenue, Murray Hill, New Jersey 07974

(Received 17 May 1995)

Recently, it was realized that use of the properties of quantum mechanics might speed up certain computations dramatically. Interest has since been growing in the area of quantum computation. One of the main difficulties of quantum computation is that decoherence destroys the information in a superposition of states contained in a quantum computer, thus making long computations impossible. It is shown how to reduce the effects of decoherence for information stored in quantum memory, assuming that the decoherence process acts independently on each of the bits stored in memory. This involves the use of a quantum analog of error-correcting codes.

Two great things about this paper:

1) Made evident the fact (clarified by others) that quantum errors are discrete.

For a one-qubit system:

$$\mathcal{T}\int_0^t dt'\exp\left(\sum_{i=1} B_i(t')\otimes S_i(t')\right)=$$

General continuous-time Bath-System quantum evolution

$$B_I\otimes I + B_X\otimes X + B_Y\otimes Y + B_Z\otimes Z$$

X, Y, Z are Pauli matrices

If error correction procedure corrects for “bit flip” (X), “π-phase error” (Z), then it also corrects Y=iZX, and, by linearity, corrects the most general system-bath coupling.

Two great things about this paper:

2) Found a code that corrects against single-qubit error.

$$|0\rangle \rightarrow \frac{1}{2\sqrt{2}}(|000\rangle + |111\rangle)(|000\rangle + |111\rangle)(|000\rangle + |111\rangle),$$

$$|1\rangle \rightarrow \frac{1}{2\sqrt{2}}(|000\rangle - |111\rangle)(|000\rangle - |111\rangle)(|000\rangle - |111\rangle). \tag{3.1}$$

Triple-repetition code inside itself.

The early favorite: Steane 7-qubit code

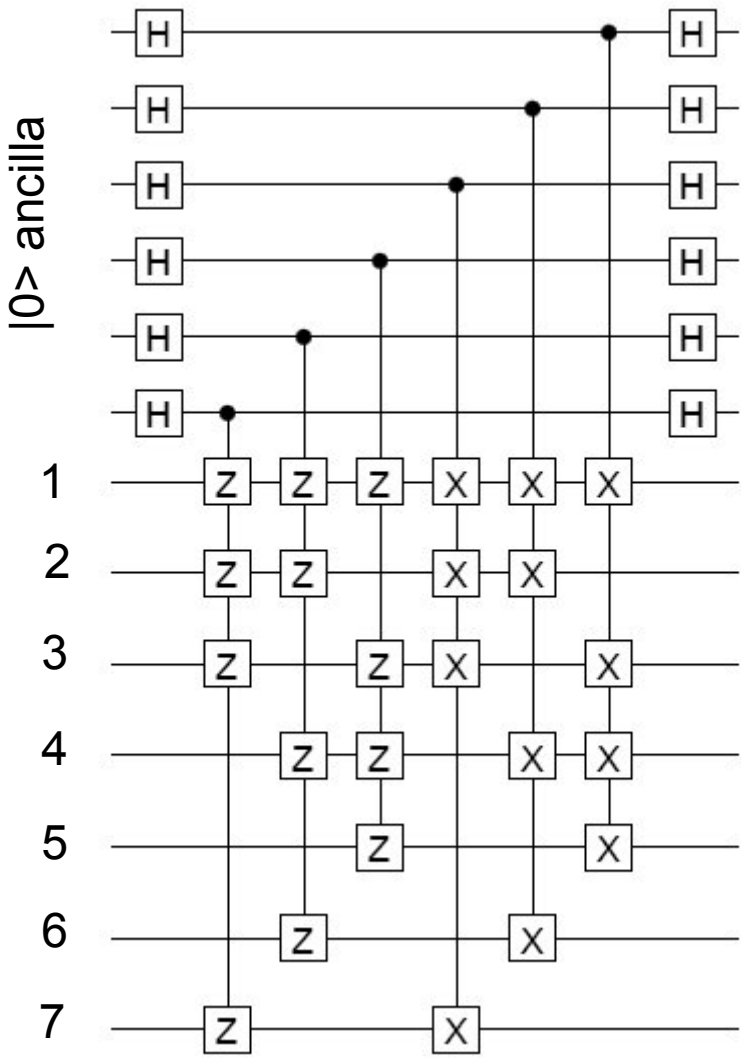

Most efficient CSS code that corrects one general quantum error (X, Y, Z)

All gates are essentially CNOTs

Error correction: circuit does non-demolition measurement of operators

$M(1)=Z_1Z_2Z_3Z_7$
$M(2)=Z_1Z_2Z_4Z_6$
$M(3)=Z_1Z_3Z_4Z_5$
$M(4)=X_1X_2X_3X_7$
$M(5)=X_1X_2X_4X_6$
$M(6)=X_1X_3X_4X_5$

Distressingly difficult experiment!

Lots of qubits, lots of long-distance coupling (regularity is not geometric)

Analysis of fault tolerance:

Consider algorithm requiring N qubits and T time steps. Without error correction, the probability of failure for a run of the algorithm is estimated as

$$TNp$$

Not small unless $p<10^{-15}$ for runs of interest. Consider a code which will correct one error, so that $p_{eff}= Cp^2$. C is a couting factor near 10,000. Now the probability of failure is

$$TNCp^2$$

Slightly improved for small p, but not good enough. But there are many codes, Including ones that correct x errors. We can choose x with a knowledge of N. So the failure probability becomes

$$T(N)NC[x(N)]\, p^{\,x(N)+1} = poly(N)C[x(N)]\, p^{\,x(N)+1}$$

So long as $C[x]$ doesn't grow too fast with x, then x can be chosen such that for some finite p, this expression can always be made <<1.

However:

However:

For many families of codes the counting factor grows incredibly fast with x:

$$C[x] \approx x^{cx}$$

One solution: for special sequences of codes, those produced by concatenation, The scaling is better:

$$C[x] \approx c^{x};$$

$$p_{th} \approx 1/c.$$

For various codes, this gave $p_{th} \approx 10^{-4}$ *or* 10^{-5}.

Other development of 1996-7:

Quantum error correction with imperfect gates

A. Yu. Kitaev

L.D.Landau Institute for Theoretical Physics,
117940, Kosygina St. 2
e-mail: kitaev@itp.ac.ru

September 25, 1996

Abstract

Quantum error correction can be performed fault-tolerantly. This allow
a quantum state intact (with arbitrary small error probability) for arbit
time at a constant decoherence rate.

In *Quantum Communication, Computing, and Measurement*, O. Hirota *et al.*, Eds. (Plenum, New York, 1997).

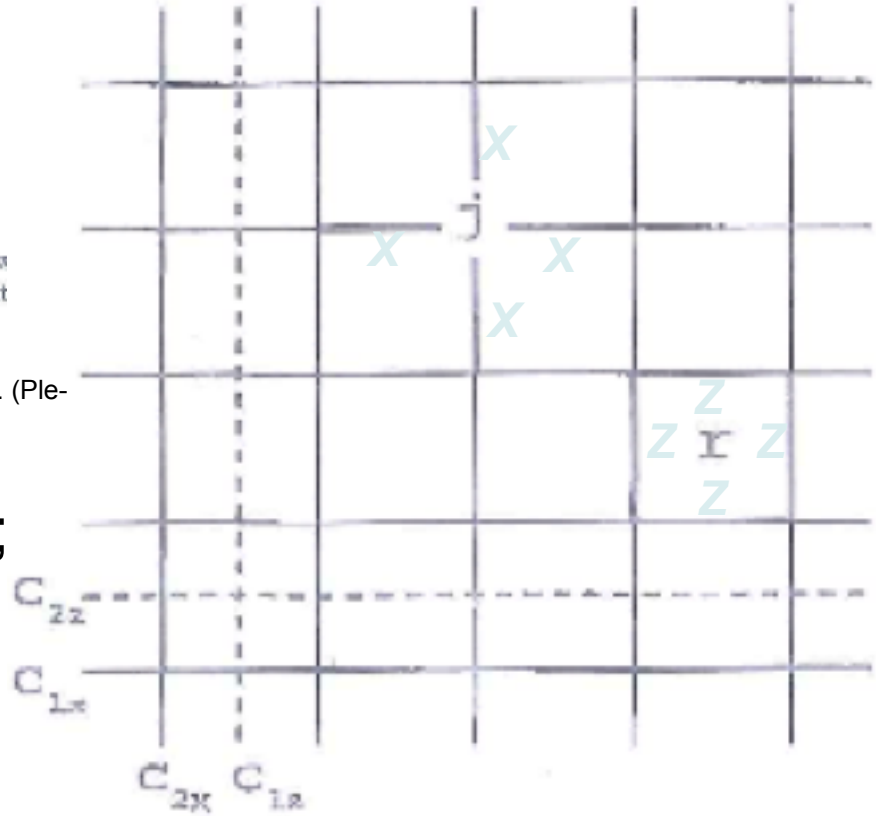

Figure 1: The toric code TOR(5).

Stabilizer generators XXXX, ZZZZ;

Stars and plaquettes of interesting 2D lattice Hamiltonian model

Toric Code/Surface Code

Surface code error correction: qubits (abstract) in fixed 2D square arrangement ("sea of qubits"), only nearest-neighbor coupling are possible

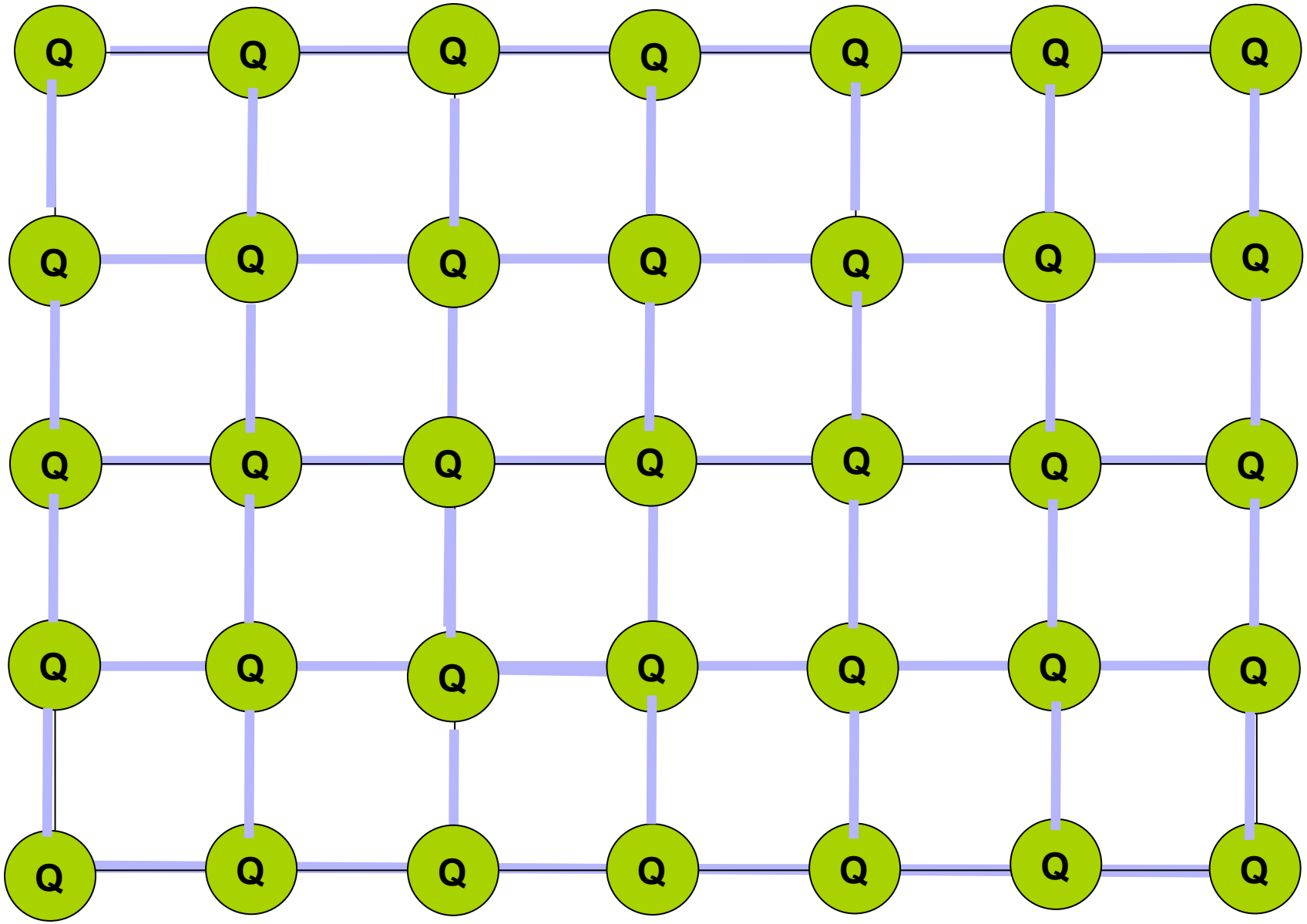

Surface code

Colorized thanks to
Jay Gambetta and John Smolin

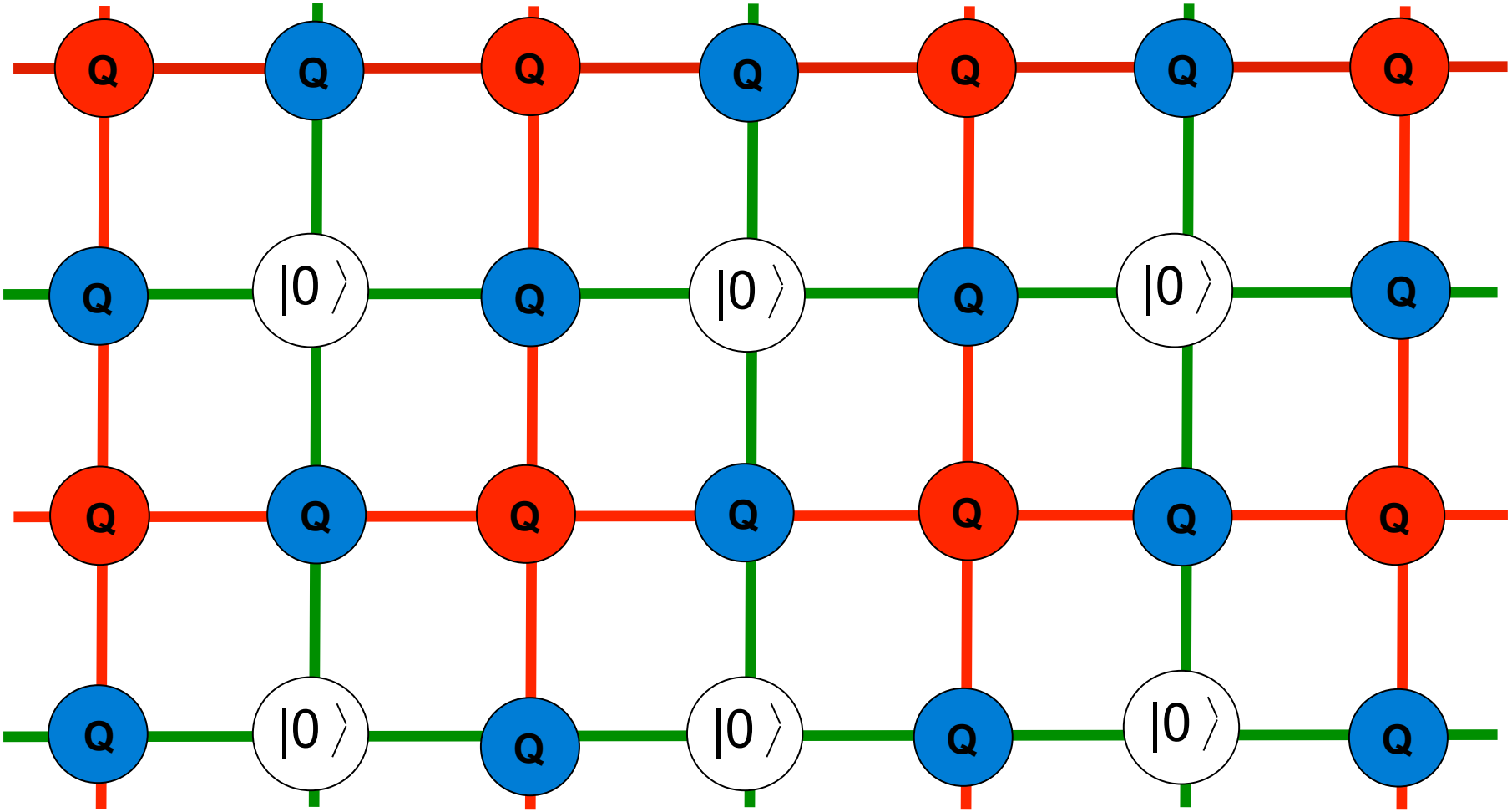

Initialize Z syndrome qubits to $|0\rangle$

Implementing the "surface code":
-- in any given patch, independent of the quantum algorithm to be done:

Surface code

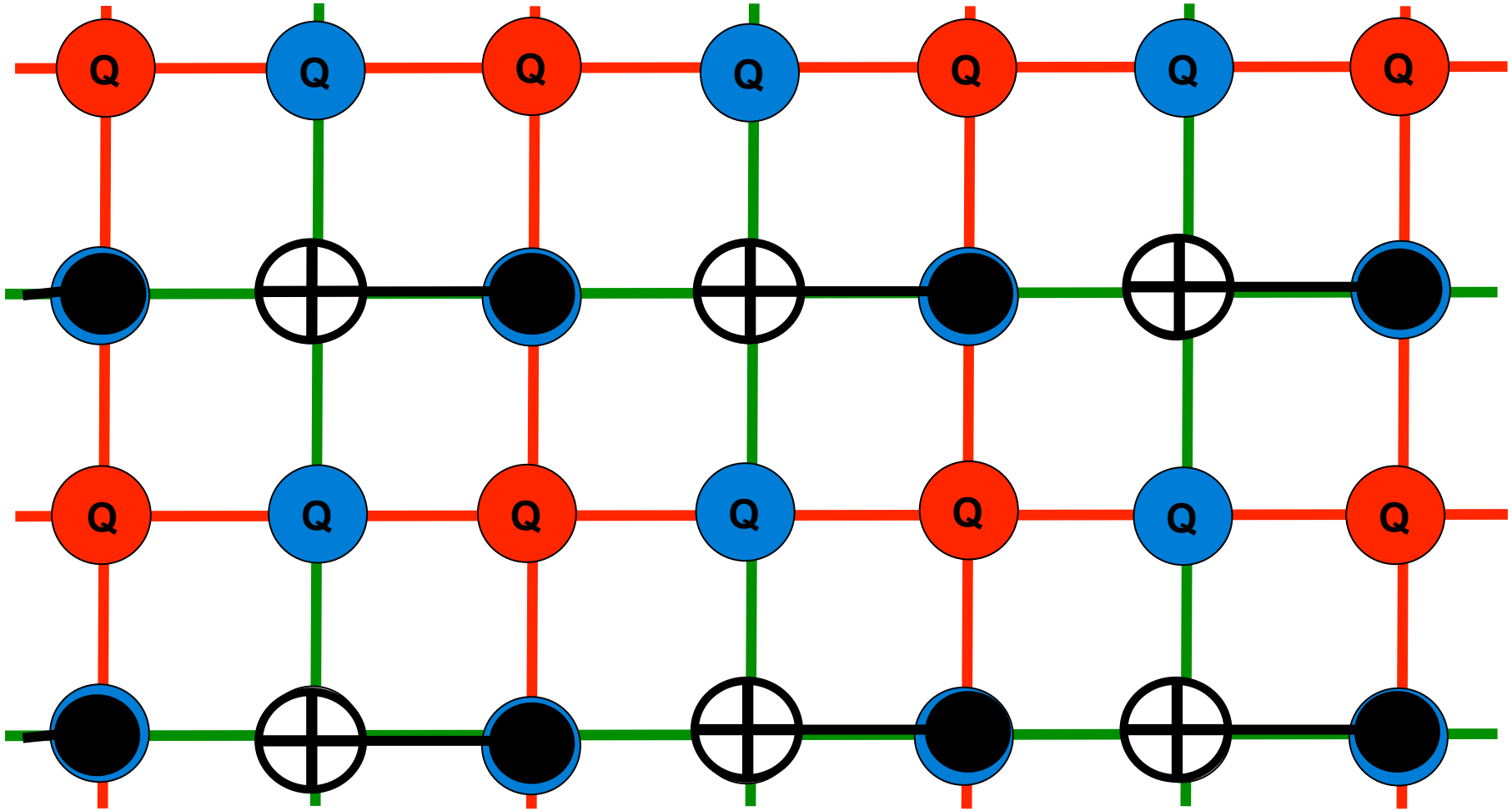

CNOT left array

Surface code

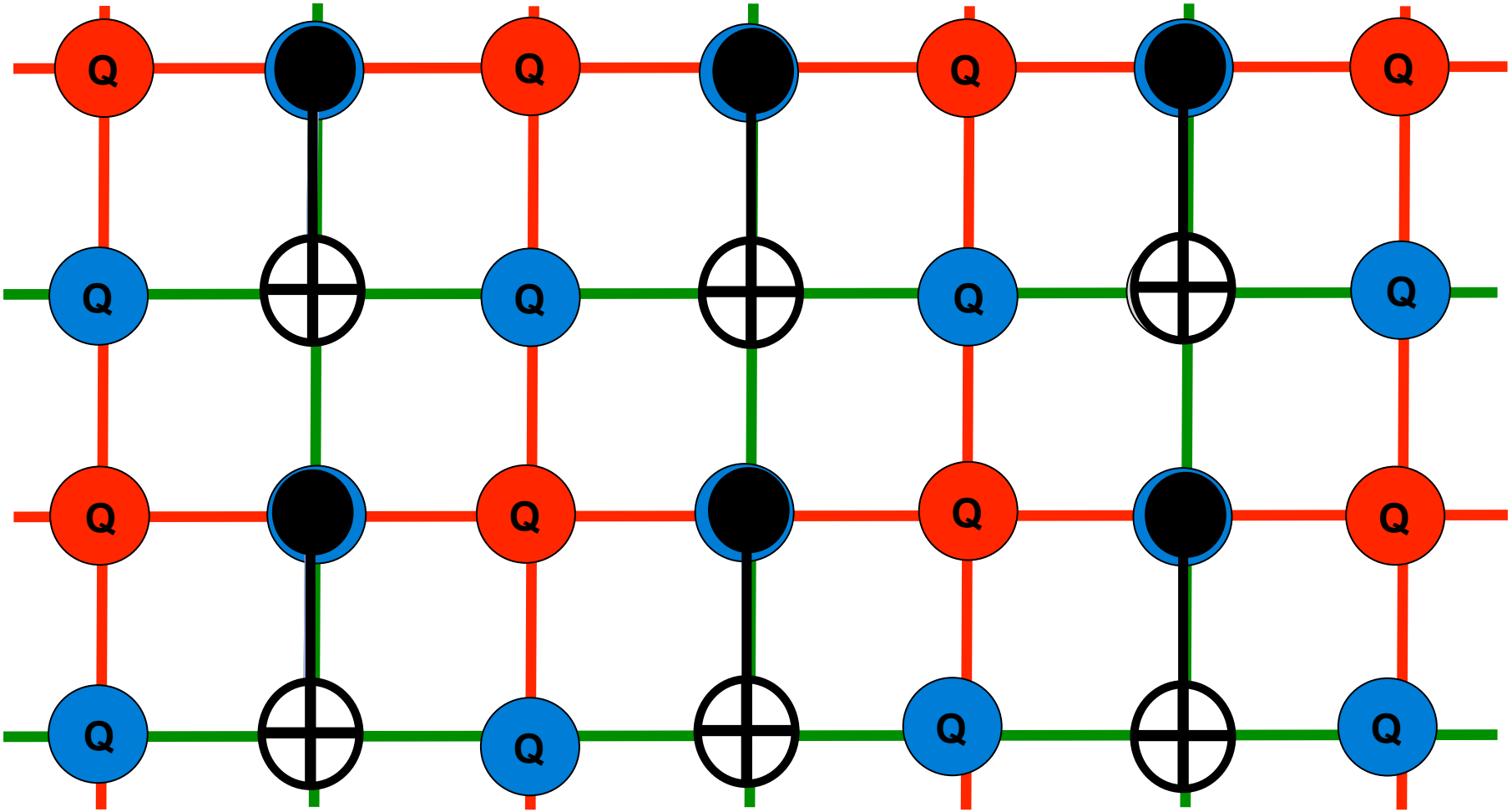

CNOT down array

Surface code

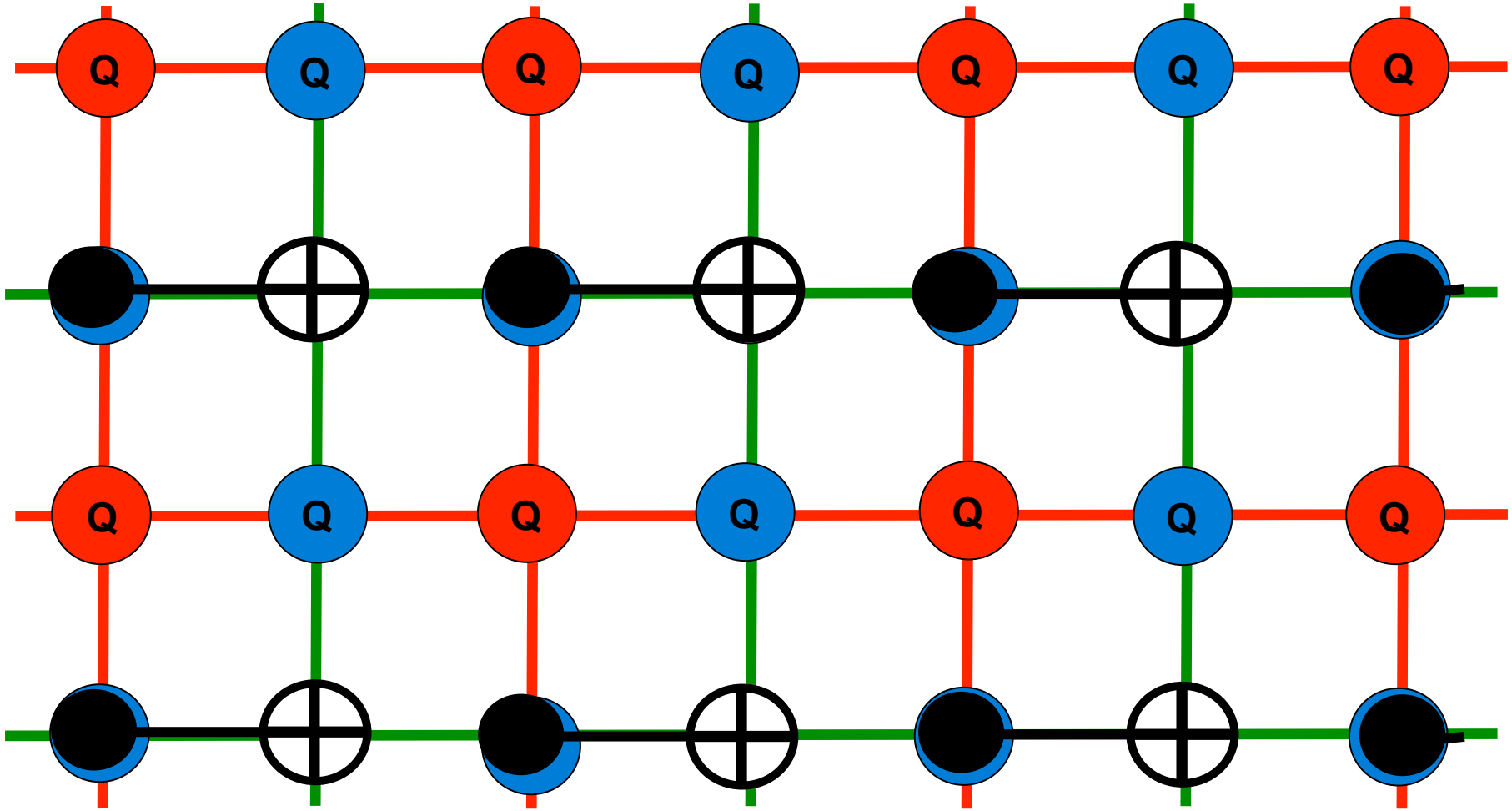

CNOT right array

Surface code fabric

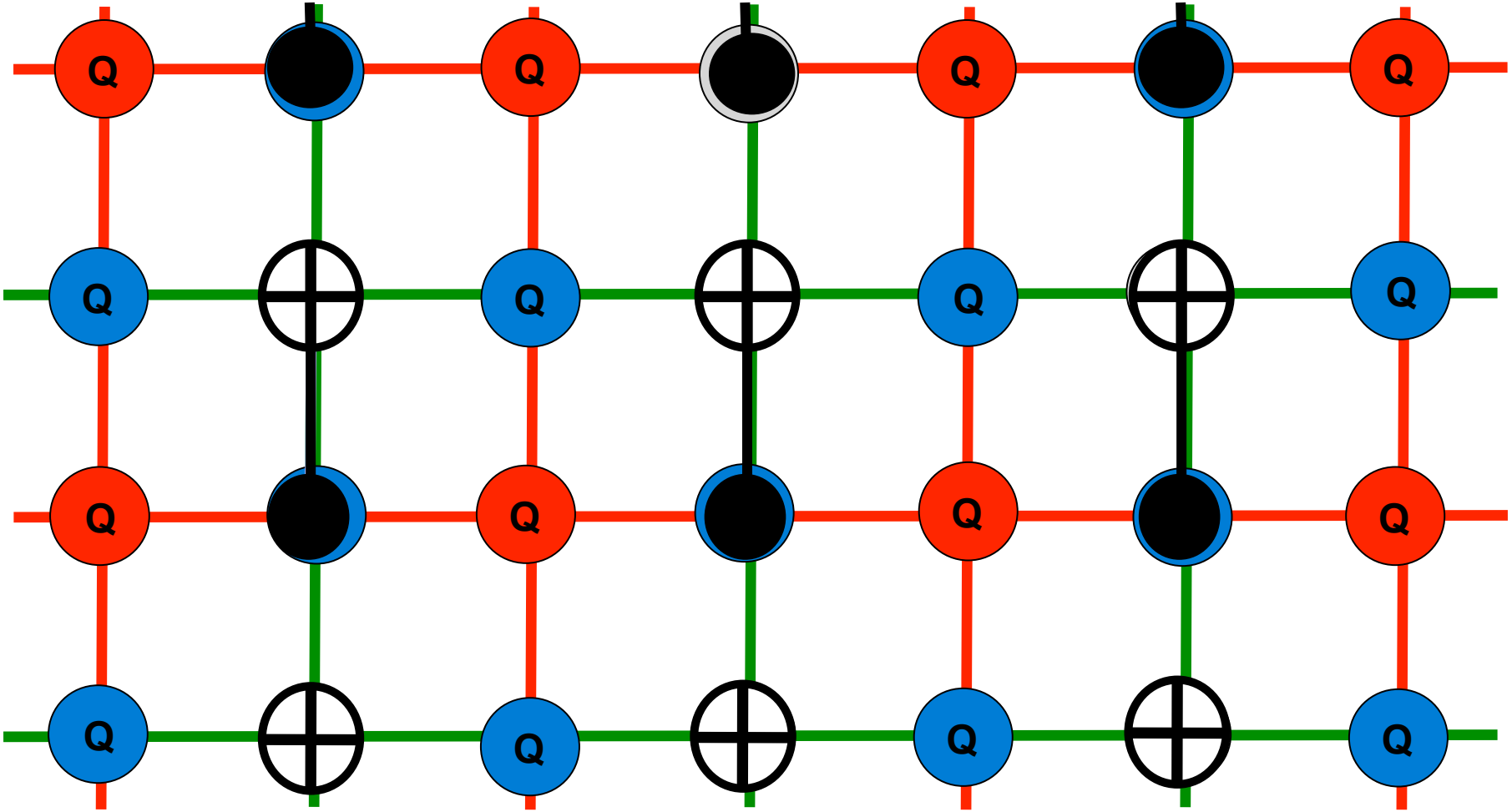

CNOT down array

Surface code fabric

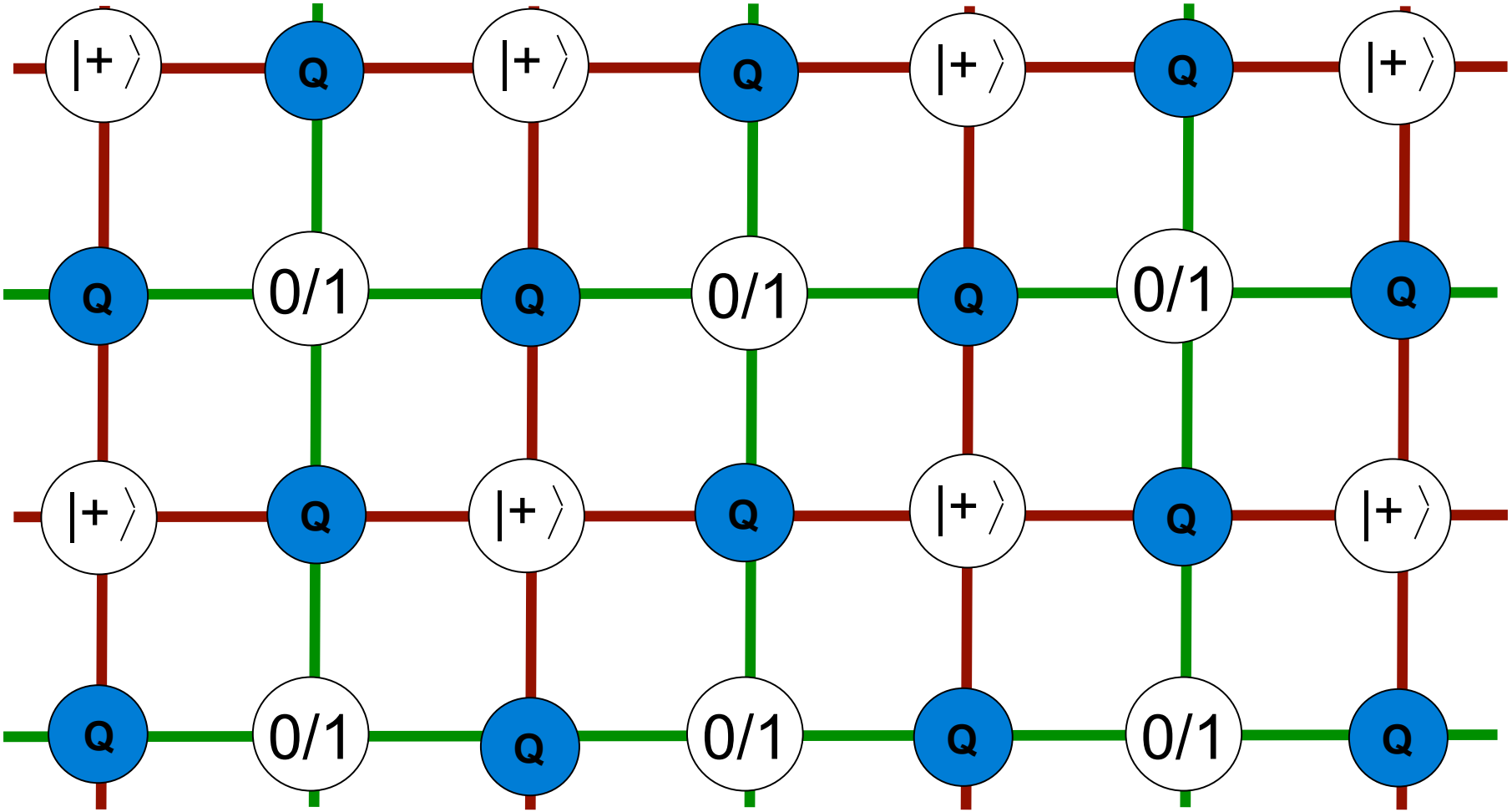

0/1 - measure in 0/1 basis

|+〉 -- prepare 0+1 state

Surface code

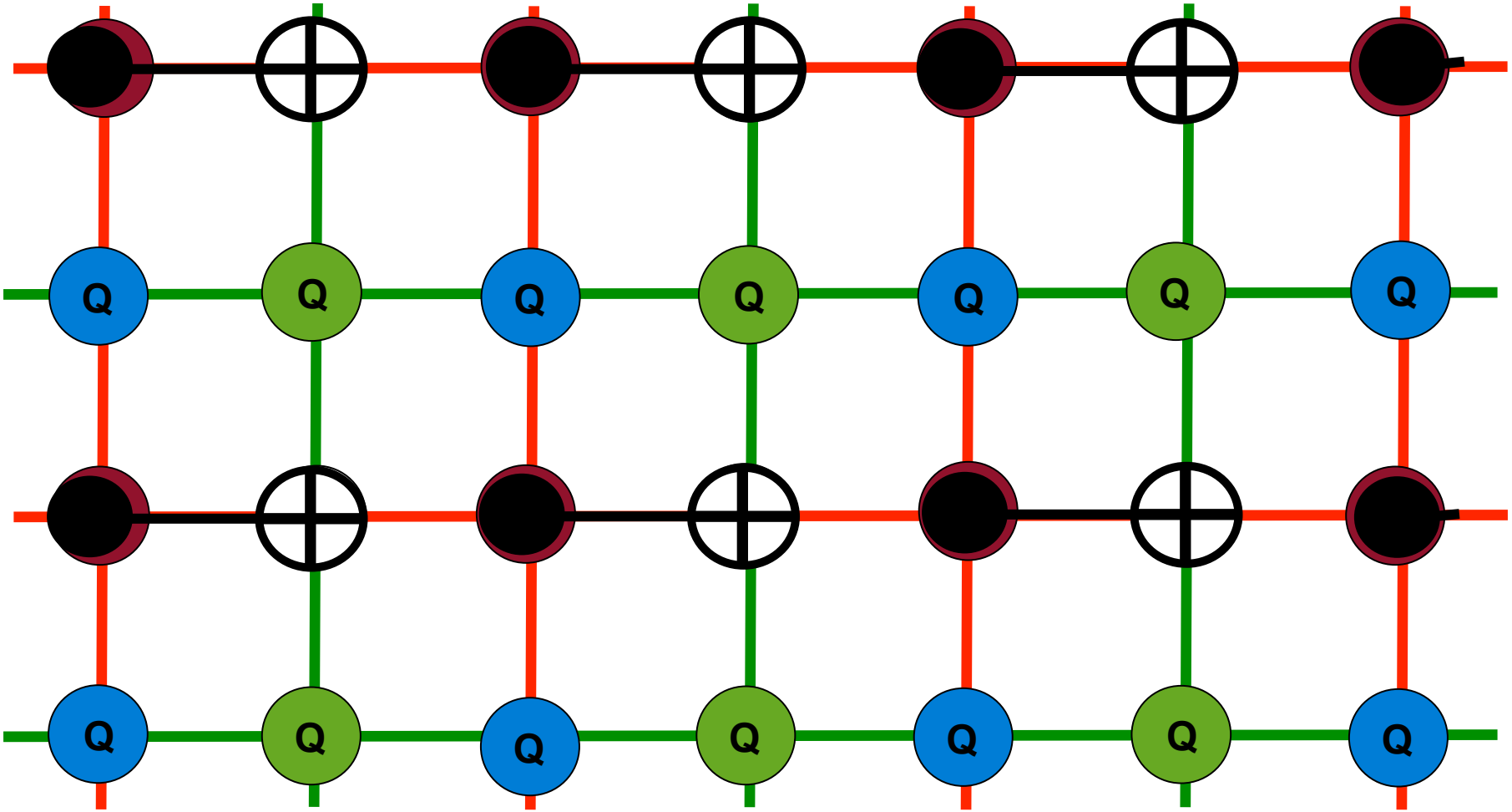

Shifted CNOT right array

Surface code

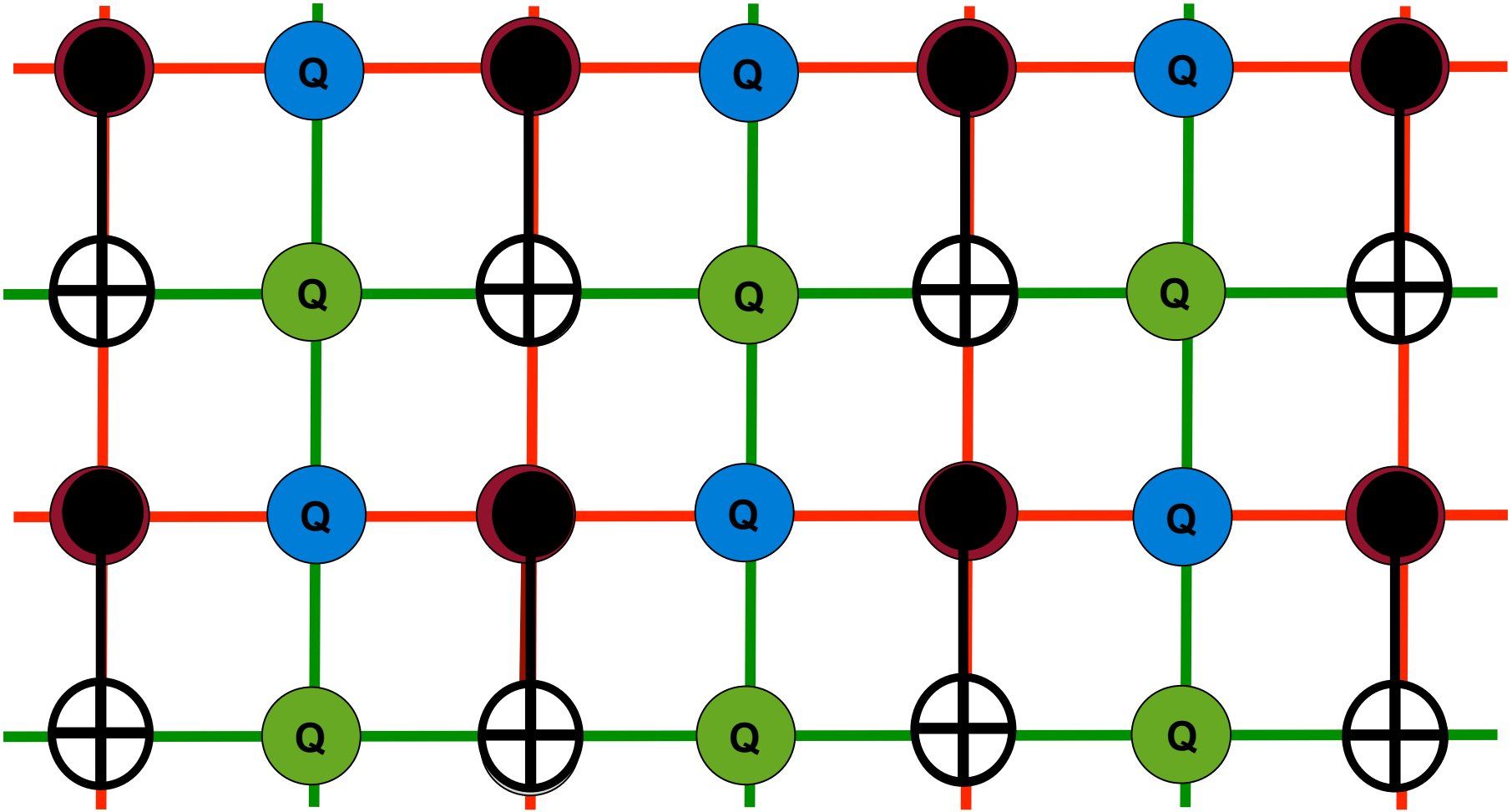

Shifted CNOT down array

Surface code

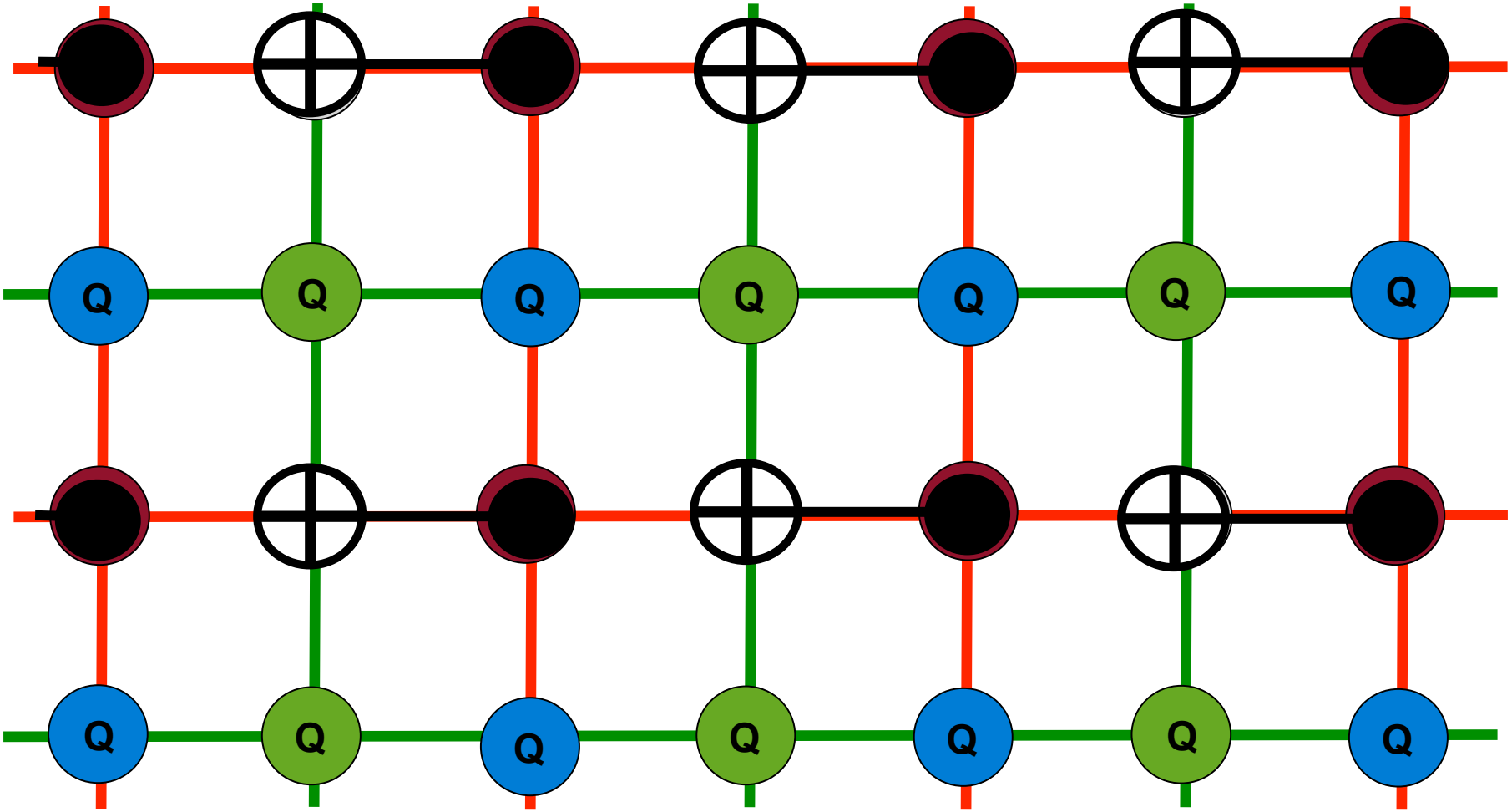

Shifted CNOT left array

Surface code

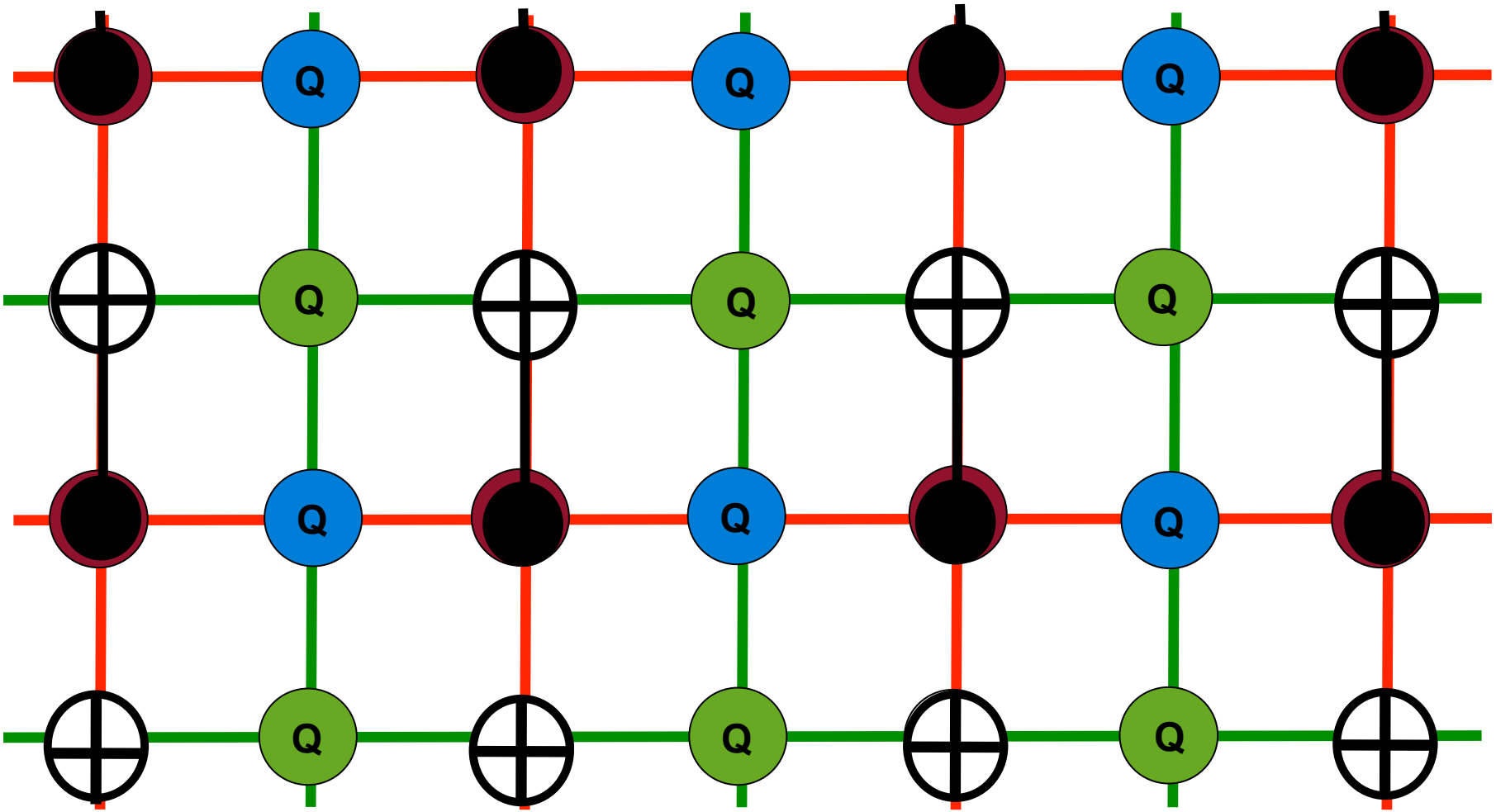

Shifted CNOT up array

Surface code fabric

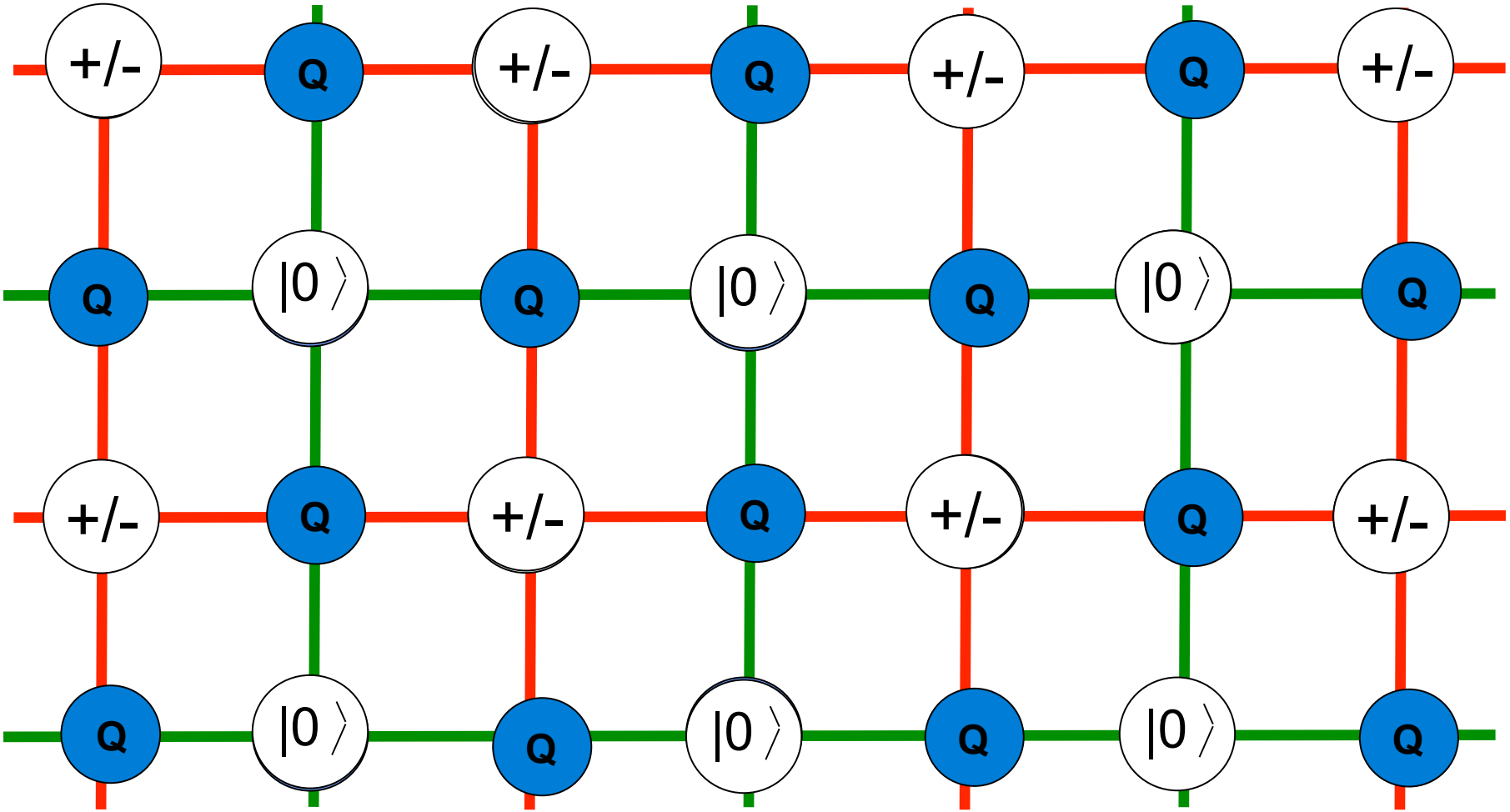

- Repeat over and over....

Observations:

Calculated fault tolerant threshold:

$$p \approx 0.7\%$$

Now p > 1 %, according to Wang, Fowler, Hollenberg, Phys. Rev. A 83, 020302(R) (2011)

Crosstalk assumed “very small”, not analyzed

Residual errors decrease exponentially with lattice size

Gates: CNOT only (can be CPHASE), no one qubit gates

If measurements slow: more ancilla qubits needed, no threshold penalty

NB: Error threshold for 4-qubit Parity QND measurement is around

2% < p < 12%

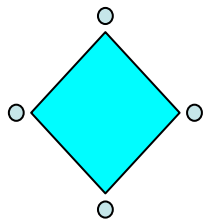

Demonstration of Two-Qubit Algorithms with a Superconducting Quantum Processor

L. DiCarlo,[1] J. M. Chow,[1] J. M. Gambetta,[2] Lev S. Bishop,[1] B. R. Johnson,[1] D. I. Schuster,[1] J. Majer,[3] A. Blais,[4] L. Frunzio,[1] S. M. Girvin,[1] and R. J. Schoelkopf[1]

[1] *Departments of Physics and Applied Physics, Yale University, New Haven, CT 06511, USA*

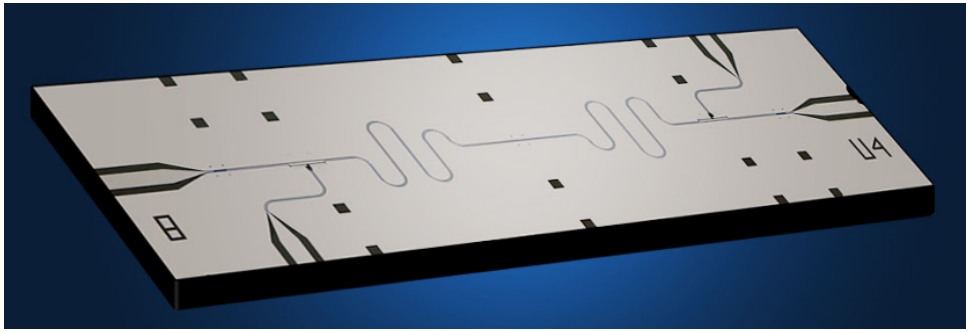

Nature 460, 240-244 (2009)

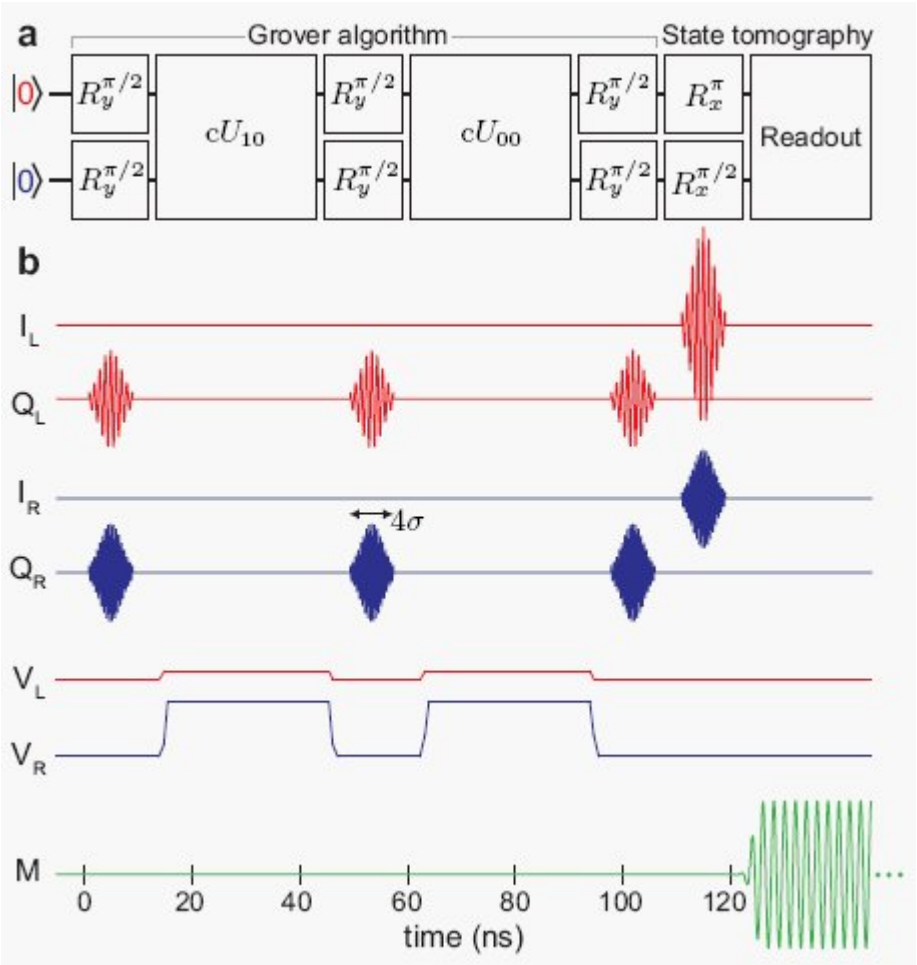

Fidelity well above 90% for two qubit gates

Like early NMR experiments, but in scalable system!

Conclusion: quantum error correction in your future

- Original insights still being played out
- Maybe a good evolutionary path to quantum computer hardware

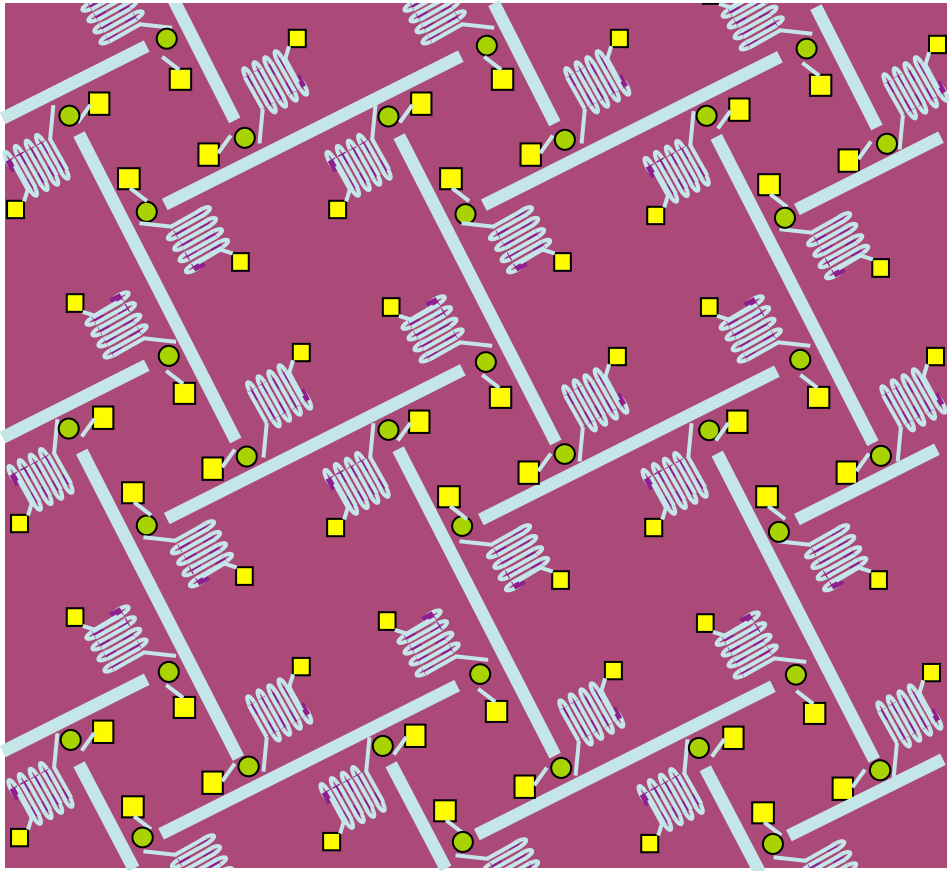

Concept (IBM) of surface code fabric with Superconducting qubits and coupling resonators

"In a machine such as this there are very many other problems due to imperfections. . . . At least some of these problems can be remedied in the usual way by techniques such as error correcting codes . . . But until we find a specific implementation for this computer, I do not know how to proceed to analyze these effects."

R.P. Feynman
"Quantum Mechanical Computers"
Optics News, February 1985